Note: This datasheet may be out of date.
Please download the latest datasheet of CDBKB455KCAY66-R0 from the official website of Murata Manufacturing Co., Ltd.

http://www.murata.com/en-gb/products/productdetail?partno=CDBKB455KCAY66-R0

CDBKB455KCAY66-R0

Discontinued RoHS REACH

Applications

Unsuitable Applications	Please be sure to read and comply with these "Precautions for use."
Specific Applications	Consumer equipment Please refer to Our Website and specifications, etc. for information about the performance, functions, quality, management, and safety required for the above applications, and use Products after confirming the performance and reliability of the actual Product.

Appearance & Shape

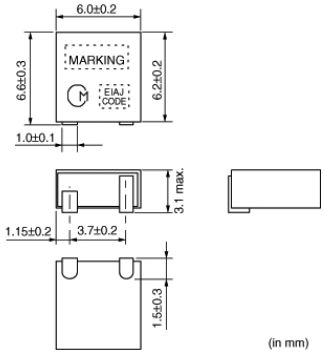

Packaging Information

Packaging	Specifications	Standard Packing Quantity
-R0	180mm Embossed Tape	500

Features

Ceramic discriminator consists of a wide bandpiezoelectric resonator. It is ideal for mobile communications equipment due to its small size and light weight. Standard line includes products for a wide range of applications, from cordless telecom to cellular telephone. Practically adjustment free at the detection circuit, small size is suitable for downsizing.

Features
1. Small in size and light weight
2. Adjustment free at detection circuit
3. High sensitivity and stability
4. Wide range of standard products are available for various ICs.
5. Operating temperature range: -20 to +80 (°C), Storage temperature range: -40 to +85 (°C)

Attention
1.This datasheet is downloaded from the website of Murata Manufacturing Co., Ltd. Therefore, it's specifications are subject to change or our products in it may be discontinued without advance notice. Please check with our sales representatives or product engineers before ordering.
2.This datasheet has only typical specifications because there is no space for detailed specifications.
Therefore, please review our product specifications or consult the approval sheet for product specifications before ordering.

Note: This datasheet may be out of date.
Please download the latest datasheet of CDBKB455KCAY66-R0 from the official website of Murata Manufacturing Co., Ltd.

http://www.murata.com/en-gb/products/productdetail?partno=CDBKB455KCAY66-R0

CDBKB455KCAY66-R0

Specifications

Operating Temperature Range	-20℃ to 80℃
Shape	SMD
Center Frequency	455.0kHz
Nominal Center Value	Yes
Recovered Audio 3dB BW	fn±4.2kHzmin.
Distortion(max.)	4%
Area of Distortion	4.0%max.(at fn)
Recovered Audio Output	40mV±10
IC	NJM2590
IC Maker	JRC
Mass	300mg

Attention
1.This datasheet is downloaded from the website of Murata Manufacturing Co., Ltd. Therefore, it's specifications are subject to change or our products in it may be discontinued without advance notice. Please check with our sales representatives or product engineers before ordering.
2.This datasheet has only typical specifications because there is no space for detailed specifications.
Therefore, please review our product specifications or consult the approval sheet for product specifications before ordering.

Note: This datasheet may be out of date.
Please download the latest datasheet of CDBKB455KCAY66-R0 from the official website of Murata Manufacturing Co., Ltd.

http://www.murata.com/en-gb/products/productdetail?partno=CDBKB455KCAY66-R0

CDBKB455KCAY66-R0

Product Data

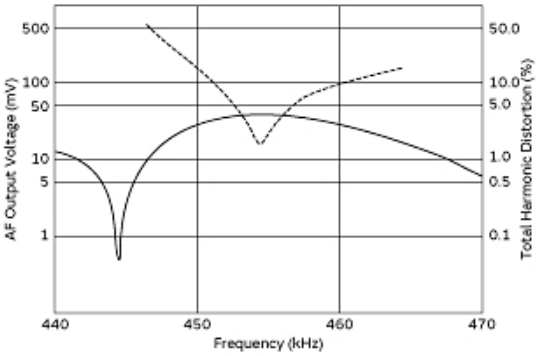

Frequency Characteristics

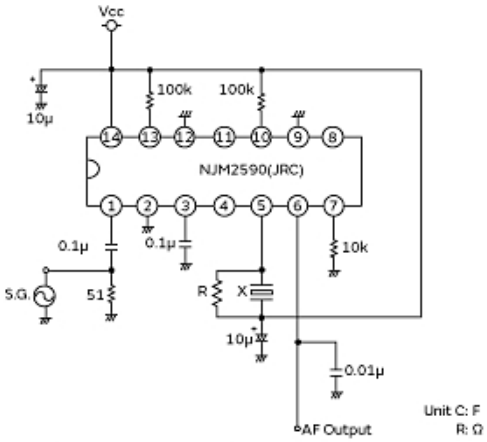

Part Number (X)	R
CDBKB455KCAY66-R0	3.0kΩ

Measurement Circuit

Attention
1.This datasheet is downloaded from the website of Murata Manufacturing Co., Ltd. Therefore, it's specifications are subject to change or our products in it may be discontinued without advance notice. Please check with our sales representatives or product engineers before ordering.
2.This datasheet has only typical specifications because there is no space for detailed specifications.
Therefore, please review our product specifications or consult the approval sheet for product specifications before ordering.