Data Sheet of SAW Components

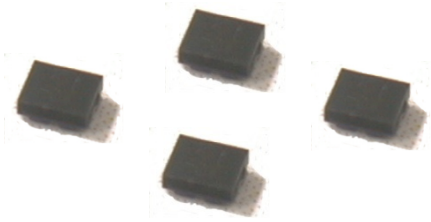

Note : Murata SAW Component is applicable for Cellular /Cordless phone (Terminal) relevant market only.
Please also read caution at the end of this document.

SAW FILTER FOR GSM1800/GSM1900

Murata part number :SAWFD1G84CA0F0A (fc=1842.5MHz)

■ Package Dimensions

Top View

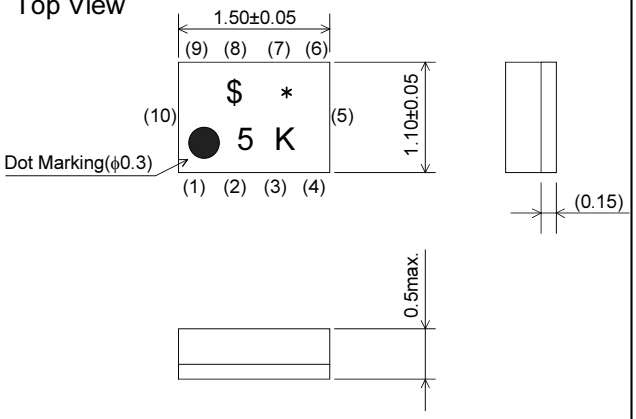

Bottom View

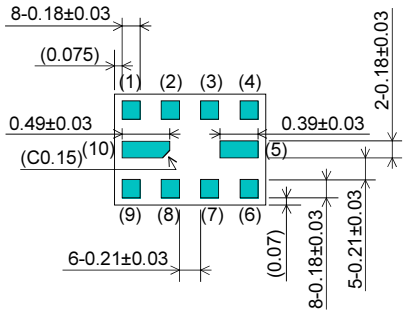

Marking: Laser Printing
∗ : EIAJ Code
(Refer to the table 1)
$: Date Code
(Refer to the table 2)

(1) : Unbalance Port
(1842.5MHz/1960MHz)
(8)(9) : Balance Port (1842.5MHz)
(6)(7) : Balance Port(1960MHz)
Others : Ground

Unit : mm

■ Specification

Item	Specification		
	-30 to 85°C	25±2°C	typ.
Nominal Center Frequency(fc)	1842.5MHz		
Insertion Loss (1805 to 1880MHz)	2.6 dB max.	2.3 dB max.	1.9 dB
Absolute Attenuation			
1) 0.1 to 1300 MHz	35 dB min.	35 dB min.	41 dB
2) 1300 to 1705 MHz	20 dB min.	20 dB min.	26 dB
3) 1705 to 1785 MHz	10 dB min.	11 dB min.	13 dB
4) 1920 to 1980 MHz	15 dB min.	15 dB min.	19 dB
5) 1980 to 3000 MHz	17 dB min.	17 dB min.	24 dB
6) 3000 to 4000 MHz	40 dB min.	40 dB min.	47 dB
7) 4000 to 5000 MHz	35 dB min.	35 dB min.	45 dB
8) 5000 to 6000 MHz	27 dB min.	27 dB min.	36 dB
Ripple Deviation (1805 to 1880MHz)	1.6 dB max.	1.0 dB max.	0.5 dB
VSWR (1805 to 1880MHz)	2.3 max.	2.1 max.	1.9
Amplitude Balance (1805 to 1880MHz)	±1.5 dB max.	±1.2 dB max.	+0.9dB
Phase Balance (1805 to 1880MHz)	180±12deg. max.	180±10deg. max.	180+3deg.
Unbalance Port Matching Impedance (nominal)	50Ω//3.6nH		
Balance Port Matching Impedance (nominal)	150Ω//18nH		
Input Signal Level	20mW (+13dBm), 2000 hours		

SAW FILTER FOR GSM1800/GSM1900

Murata part number :SAWFD1G84CA0F0A (fc=1842.5MHz)

■ Frequency Performance

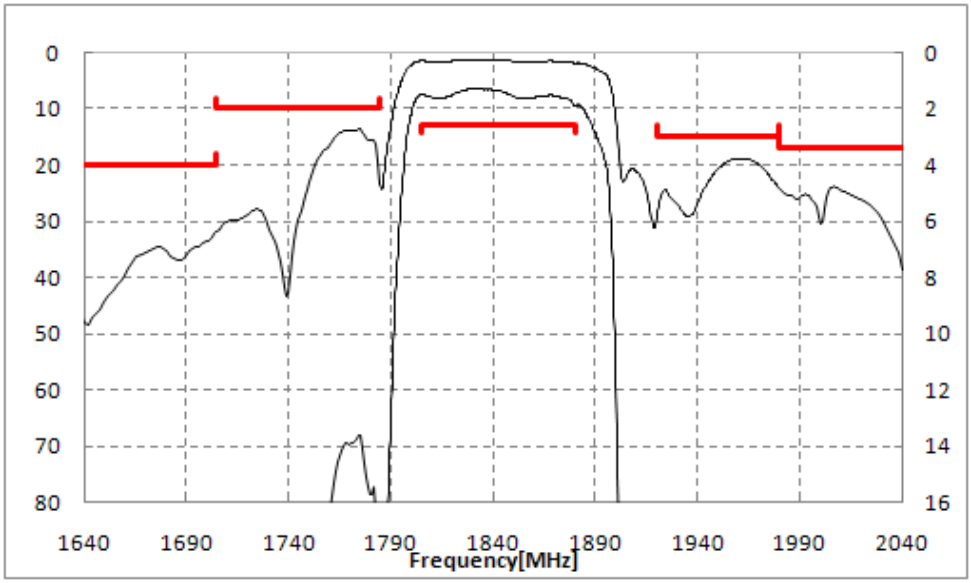

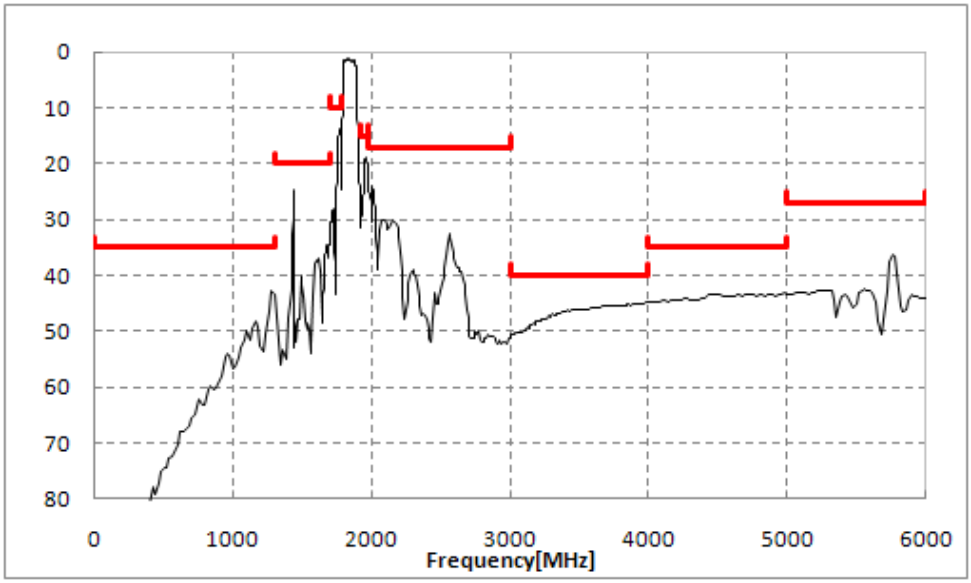

Amplitude balance

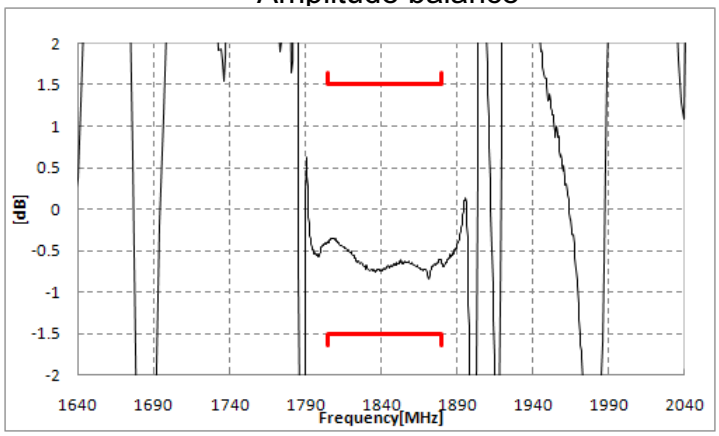

Phase balance

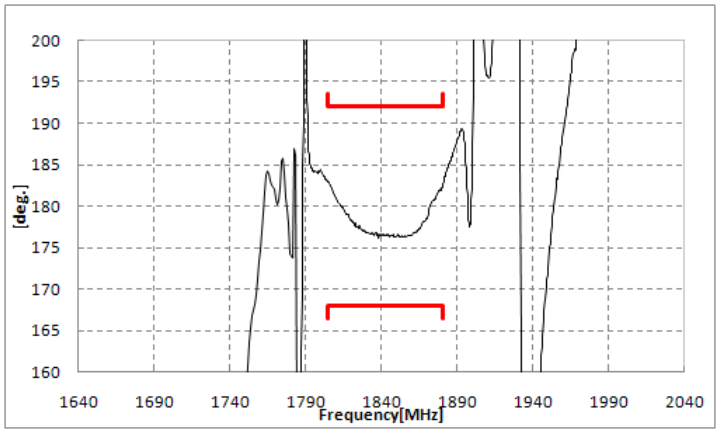

SAW FILTER FOR GSM1800/GSM1900

Murata part number :SAWFD1G84CA0F0A (fc=1960MHz)

■ Package Dimensions

Top View

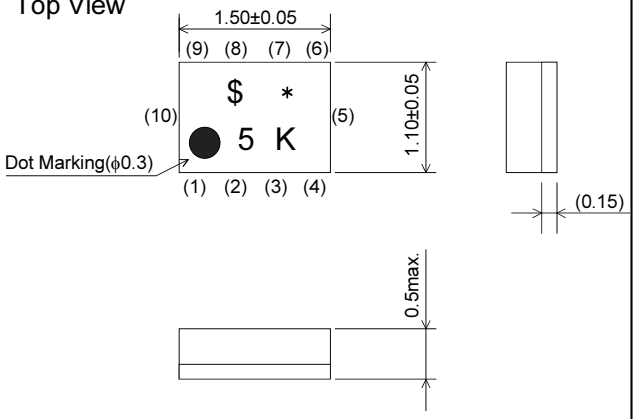

Bottom View

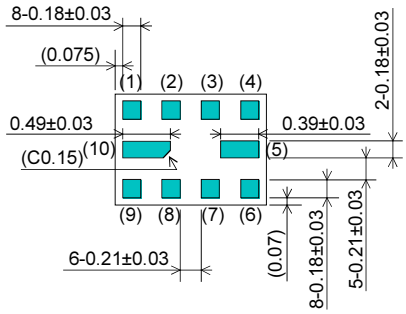

Marking: Laser Printing
∗ : EIAJ Code
(Refer to the table 1)
$: Date Code
(Refer to the table 2)

(1) : Unbalance Port
(1842.5MHz/1960MHz)
(8)(9) : Balance Port (1842.5MHz)
(6)(7) : Balance Port(1960MHz)
Others : Ground

Unit : mm

■ Specification

Item	Specification		
	-30 to 85°C	25±2°C	typ.
Nominal Center Frequency(fc)	1960 MHz		
Insertion Loss (1930 to 1990MHz)	2.9 dB max.	2.5 dB max.	2.1 dB
Absolute Attenuation			
1) 0.1 to 1830 MHz	23 dB min.	23 dB min.	27 dB
2) 1830 to 1910 MHz	13 dB min.	13 dB min.	17 dB
3) 2010 to 2070 MHz	7 dB min.	15 dB min.	18 dB
4) 2070 to 3000 MHz	25 dB min.	25 dB min.	36 dB
5) 3000 to 5700 MHz	35 dB min.	35 dB min.	39 dB
6) 5700 to 5970 MHz	32 dB min.	32 dB min.	38 dB
7) 5970 to 6000 MHz	30 dB min.	30 dB min.	37 dB
Ripple Deviation (1930 to 1990MHz)	1.6 dB max.	1.0 dB max.	0.5 dB
VSWR (1930 to 1990MHz)	2.2 max.	1.8 max.	1.5
Amplitude Balance (1930 to 1990MHz)	±1.4 dB max.	±1.3 dB max.	+0.9dB
Phase Balance (1930 to 1990MHz)	180±10deg. max.	180±10deg. max.	180+3deg.
Unbalance Port Matching Impedance (nominal)	50Ω//3.6nH		
Balance Port Matching Impedance (nominal)	150Ω//18nH		
Input Signal Level	20mW (+13dBm), 2000 hours		

SAW FILTER FOR GSM1800/GSM1900

Murata part number :SAWFD1G84CA0F0A (fc=1960MHz)

Frequency Performance

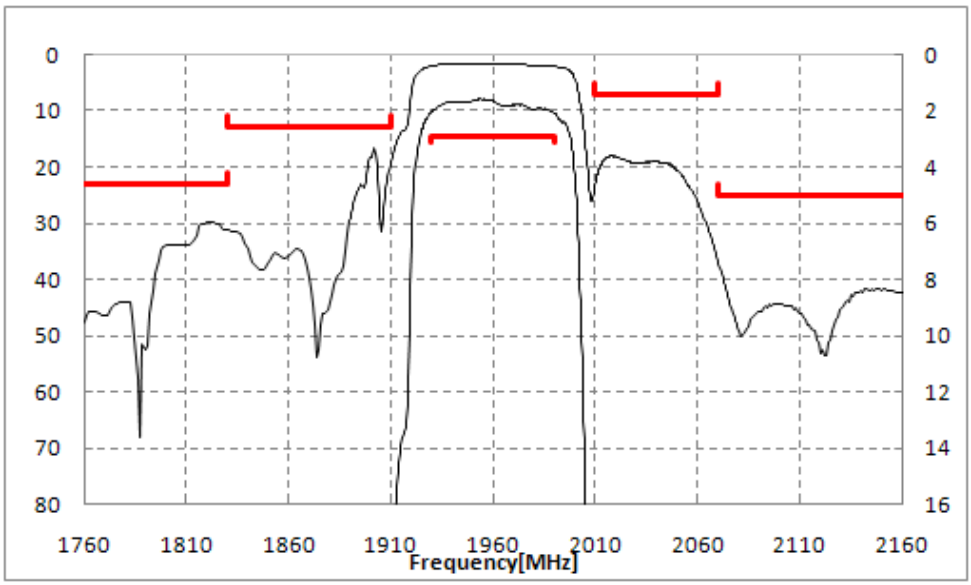

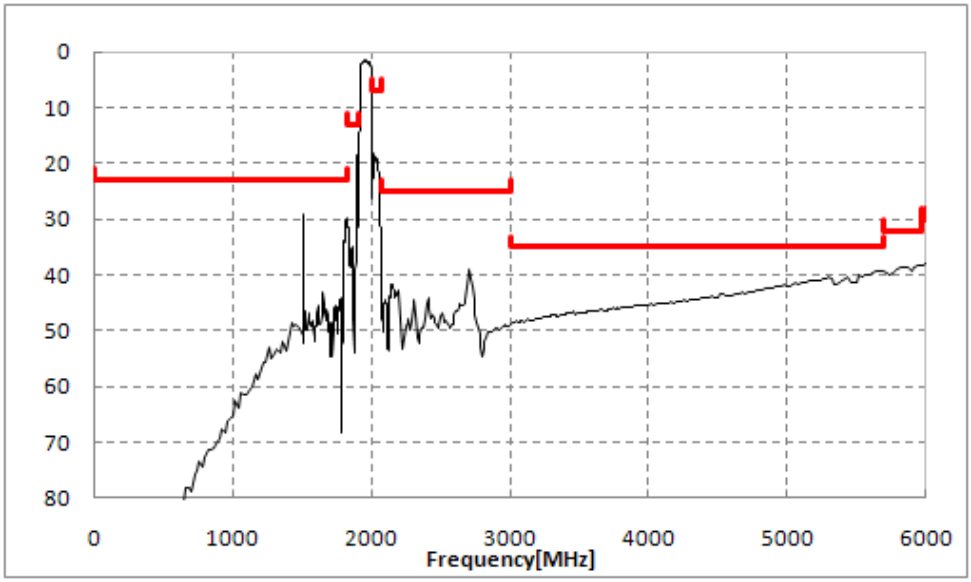

Amplitude balance

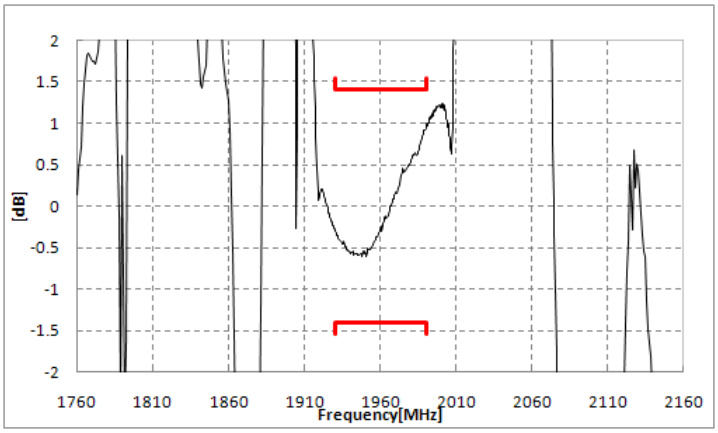

Phase balance

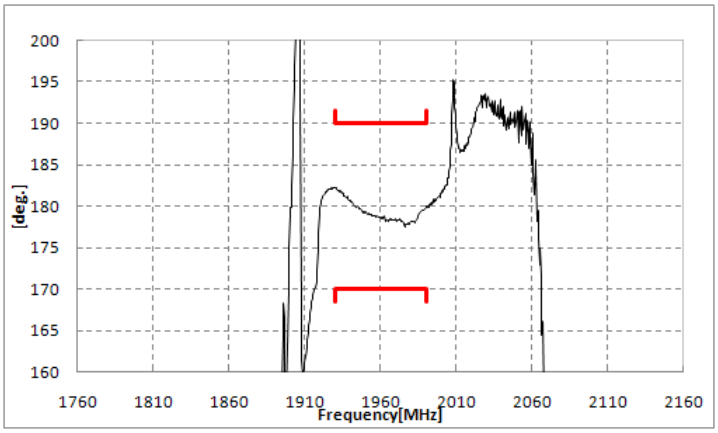

SAW FILTER FOR GSM1800/GSM1900

Murata part number :SAWFD1G84CA0F0A

■ Dimensions of Carrier Tape

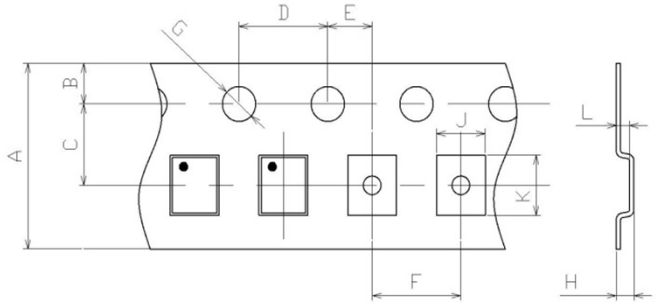

A:	8.0	J:	1.3
B:	1.75	K:	1.7
C:	3.50	L:	0.60
D:	4.0		
E:	2.00		
F:	4.0		
G:	φ1.5		
H:	0.90		

Unit: mm

■ Dimensions of Tape

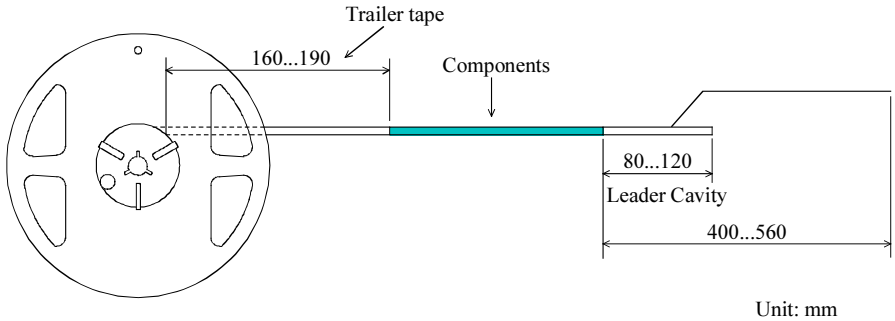

Unit: mm

■ Dimensions of Reel

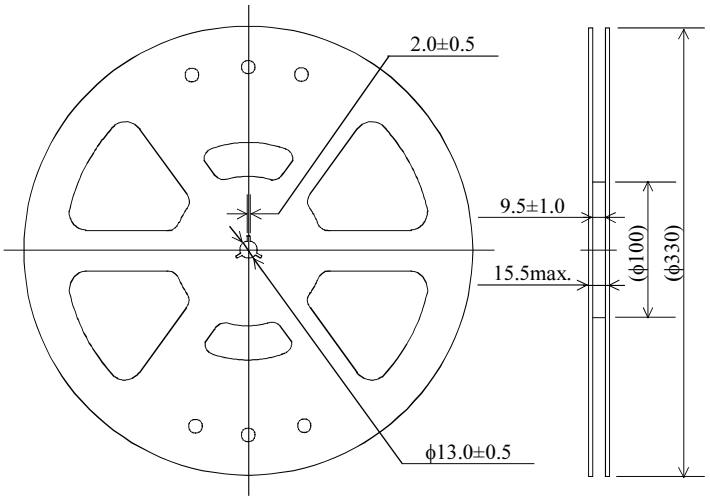

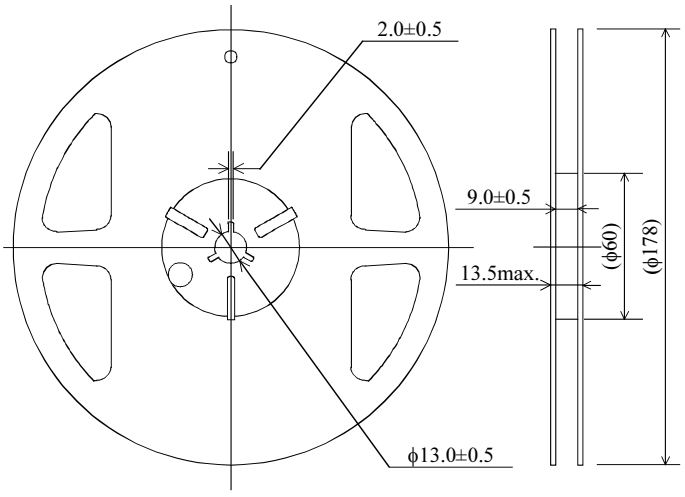

SAWFD1G84CA0F0AR15 … 5000pcs/reel(φ178) Unit: mm
SAWFD1G84CA0F0AR00 … 10000pcs/reel(φ330)
SAWFD1G84CA0F0AR1S… sample Order (φ178/330)

SAW FILTER FOR GSM1800/GSM1900

Murata part number :SAWFD1G84CA0F0A

■ Recommended Land Pattern

Top View

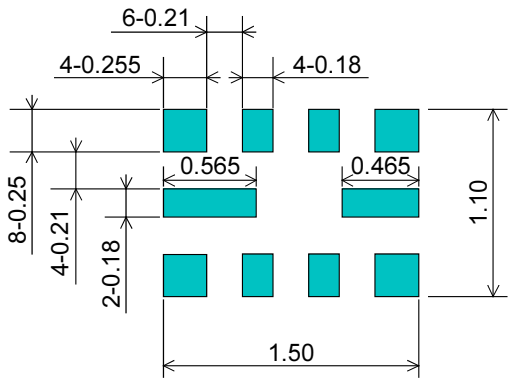

: Land Pattern

Unit : mm

■ Test Circuit

Bottom View

1842.5MHz

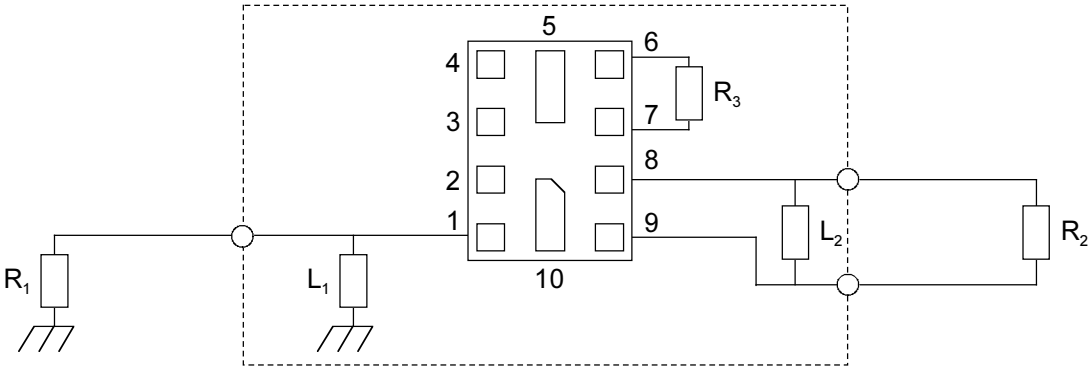

1960MHz

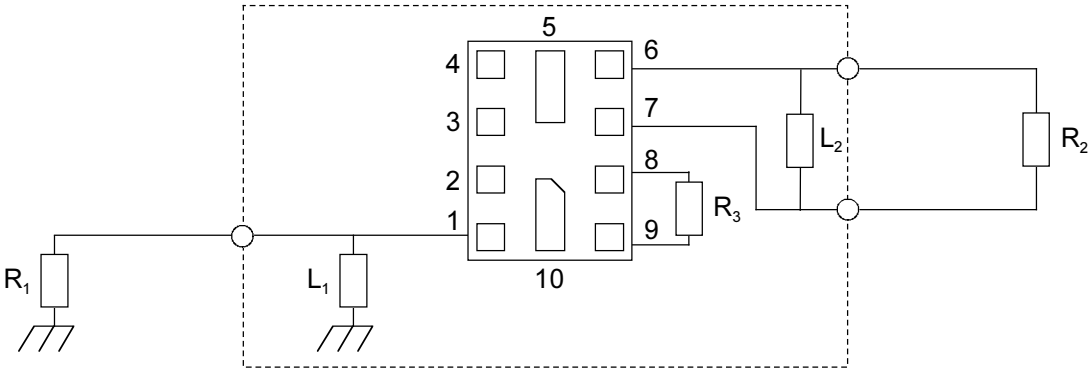

R_1: 50Ω
R_2: 150Ω
R_3: 150Ω
L_1 : 3.6nH
L_2 : 18nH

SAW FILTER FOR GSM1800/GSM1900

Murata part number :SAWFD1G84CA0F0A

■ RoHS Compliance

This component is compliant with RoHS directive.

This component was always RoHS compliant from the first date of manufacture.

・Caution - Limitation of Applications
This product is intended for the following applications only; however, please do not use this product in these applications where defects might directly cause damage to a third party's life, body or property.

a. Mobile Telephone
b. Cordless phone (except for Automotive use)
c. PC (Including Notebook PC, Netbook PC, Tablet)
d. Game
e. Camera (except for Business/security use)
f. Set Top Box
g. Electronic dictionary
h. Digital audio equipment

・This catalog is for reference only and not an official product specification document, therefore, please review and approve our official product specification before ordering this product.

■ Marking code

Table 1 ✱: EIAJ Code

This rule of code is applied repeatedly every four year.

2013 2017 2021	Jan.	Feb.	Mar.	Apr.	May.	Jun.	Jul.	Aug.	Sep.	Oct.	Nov.	Dec.
	A	B	C	D	E	F	G	H	J	K	L	M
2014 2018 2022	Jan.	Feb.	Mar.	Apr.	May.	Jun.	Jul.	Aug.	Sep.	Oct.	Nov.	Dec.
	N	P	Q	R	S	T	U	V	W	X	Y	Z
2015 2019 2023	Jan.	Feb.	Mar.	Apr.	May.	Jun.	Jul.	Aug.	Sep.	Oct.	Nov.	Dec.
	a	b	c̄	d	e	f	g	h	j	k	l	m
2016 2020 2024	Jan.	Feb.	Mar.	Apr.	May.	Jun.	Jul.	Aug.	Sep.	Oct.	Nov.	Dec.
	n	p	q	r	s	t	u	v	w	x	y	z

Table 2 $: Date Code

date	1st	2nd	3rd	4th	5th	6th	7th	8th	9th	10th	
code	A	B	C	D	E	F	G	H	J	K	
date	11th	12th	13th	14th	15th	16th	17th	18th	19th	20th	
code	L	M	N	P	Q	R	S	T	U	V	
date	21st	22nd	23rd	24th	25th	26th	27th	28th	29th	30th	31st
code	W	X	Y	Z	a	b	c̄	d	e	f	g

SAW FILTER FOR GSM1800/GSM1900

Murata part number :SAWFD1G84CA0F0A

■Important notice

PLEASE READ THIS NOTICE BEFORE USING OUR PRODUCTS.

Please make sure that your product has been evaluated and confirmed from the aspect of the fitness for the specifications of our product when our product is mounted to your product.
All the items and parameters in this product specification/datasheet/catalog have been prescribed on the premise that our product is used for the purpose, under the condition and in the environment specified in this specification. You are requested not to use our product deviating from the condition and the environment specified in this specification.
Please note that the only warranty that we provide regarding the products is its conformance to the specifications provided herein. Accordingly, we shall not be responsible for any defects in products or equipment incorporating such products, which are caused under the conditions other than those specified in this specification.

WE HEREBY DISCLAIMS ALL OTHER WARRANTIES REGARDING THE PRODUCTS, EXPRESS OR IMPLIED, INCLUDING WITHOUT LIMITATION ANY WARRANTY OF FITNESS FOR A PARTICULAR PURPOSE, THAT THEY ARE DEFECT-FREE, OR AGAINST INFRINGEMENT OF INTELLECTUAL PROPERTY RIGHTS.

The product shall not be used in any application listed below which requires especially high reliability for the prevention of such defect as may directly cause damage to the third party's life, body or property. You acknowledge and agree that, if you use our products in such applications, we will not be responsible for any failure to meet such requirements. Furthermore, YOU AGREE TO INDEMNIFY AND DEFEND US AND OUR AFFILIATES AGAINST ALL CLAIMS, DAMAGES, COSTS, AND EXPENSES THAT MAY BE INCURRED, INCLUDING WITHOUT LIMITATION, ATTORNEY FEES AND COSTS, DUE TO THE USE OF OUR PRODUCTS IN SUCH APPLICATIONS.

- Aircraft equipment.
- Aerospace equipment
- Undersea equipment.
- Power plant control equipment - Medical equipment.
- Transportation equipment (vehicles, trains, ships, elevator, etc.).
- Traffic signal equipment.
- Disaster prevention / crime prevention equipment.
- Burning / explosion control equipment
- Application of similar complexity and/ or reliability requirements to the applications listed in the above.

We expressly prohibit you from analyzing, breaking, Reverse-Engineering, remodeling altering, and reproducing our product. Our product cannot be used for the product which is prohibited from being manufactured, used, and sold by the regulations and laws in the world.

Please do not use the product in molding condition.

This product is ESD (ElectroStatic Discharge) sensitive device.
When you install or measure this, you should be careful not to add antistatic electricity or high voltage.
Please be advised that you had better check anti serge voltage.

We do not warrant or represent that any license, either express or implied, is granted under any our patent right, copyright, mask work right, or our other intellectual property right relating to any combination, machine, or process in which our products or services are used. Information provided by us regarding third-party products or services does not constitute a license from us to use such products or services or a warranty or endorsement thereof. Use of such information may require a license from a third party under the patents or other intellectual property of the third party, or a license from us under our patents or other intellectual property.

SAW FILTER FOR GSM1800/GSM1900

Murata part number :SAWFD1G84CA0F0A

Please do not use our products, our technical information and other data provided by us for the purpose of developing of mass-destruction weapons and the purpose of military use.
Moreover, you must comply with "foreign exchange and foreign trade law", the "U.S. export administration regulations", etc.

Please note that we may discontinue the manufacture of our products, due to reasons such as end of supply of materials and/or components from our suppliers.

Customer acknowledges that Murata will, if requested by you, conduct a failure analysis for defect or alleged defect of Products only at the level required for consumer grade Products, and thus such analysis may not always be available or be in accordance with your request (for example, in cases where the defect was caused by components in Products supplied to Murata from a third party).

The product shall not be used in any other application/model than that of claimed to Murata.

Customer acknowledges that engineering samples may deviate from specifications and may contain defects due to their development status.
We reject any liability or product warranty for engineering samples.
In particular we disclaim liability for damages caused by
- the use of the engineering sample other than for evaluation purposes, particularly the installation or integration in the product to be sold by you,
- deviation or lapse in function of engineering sample,
- improper use of engineering samples.

We disclaims any liability for consequential and incidental damages.

If you can’t agree the above contents, you should inquire our sales.