Datasheet of SAW Device

SAW Single Filter

for Band8 / Balanced / 5pin /1109

Murata PN: SAFFB942MFB0F0A

■ Feature

- ISM2.4 High Rejection Type

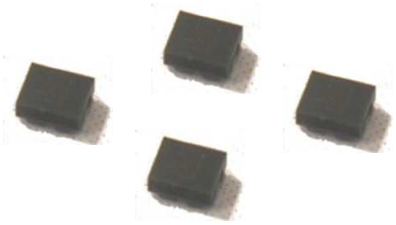

Note : Murata SAW Component is applicable for Cellular /Cordless phone (Terminal) relevant market only.
Please also read caution at the end of this document.

SAFFB942MFB0F0A (Band8 / Balanced / 5pin / 1109)

Revision No.	Date	Description
SAFFB942MFB0F0A_rev. A	Mar-29-2013	■ Initial Release
SAFFB942MFB0F0A_rev. B	Jun-16-2014	■ Updated for MP
SAFFB942MFB0F0A_rev. C	Aug-25-2016	■ Updated General Information
SAFFB942MFB0F0A_rev. D	Mar-23-2017	■ Updated General Information

- Operating temperature : -30 to +85 deg.C
- Storage temperature : -40 to +85 deg.C
- Input Power : +15 dBm 2000 h
- D.C. Volatage between the terminals : 3V (25+/-2 deg.C)
- Minimum Resistance between the terminals : 10M ohm
- RoHS compliance : Yes
- ESD (ElectroStatic Discharge) sensitive device

All Rights Reserved, Copyright© Murata Manufacturing Co., Ltd

Package Dimensions & Recommended Land Pattern

unit: mm

Dimensions

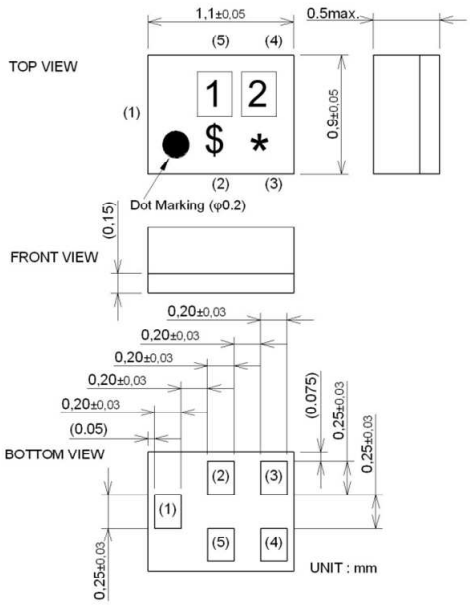

Marking : Laser Printing
- * : Month code(Refer to the table A)
- $: Date code(Refer to the table B)
- 1 : Z
- 2 : N

Terminal Number
- (1) : Unbalanced port
- (3)(4) : Balanced port
- Others : GND

Notice) Please refer to Measurement Circuit for Port information in detail.

Land Pattern

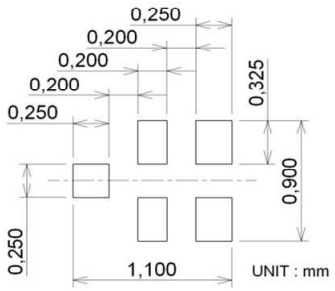

Measurement Circuit (Top Thru View)

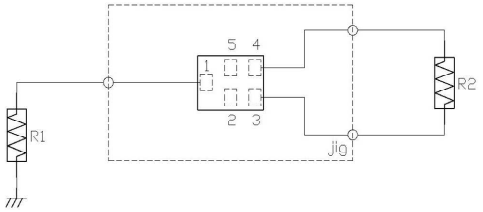

R1 : 50 ohm	
R2 : 100 ohm	

All Rights Reserved, Copyright© Murata Manufacturing Co., Ltd

SAFFB942MFB0F0A (Band8 / Balanced / 5pin / 1109)

Electrical Characteristic < Single Filter >

Item		Characteristics (-30 to +85 deg.C) min.	typ.*	max.	Unit	Note
Center Frequency			942.5		MHz	
Insertion Loss	925. to 960. MHz		3.0	4.5	dB	
	925. to 960. MHz		2.5	4.0	dB	+23 to +27deg.C
	925.48 to 959.52 MHz		2.6	4.2	dB	
	925.48 to 959.52 MHz		2.4	3.8	dB	+23 to +27deg.C
Ripple Deviation	925. to 960. MHz		1.5	3.5	dB	
	925. to 960. MHz		1.5	3.0	dB	+23 to +27deg.C
VSWR	925. to 960. MHz		2.0	2.3		VSWR11
	925. to 960. MHz		1.9	2.3		VSWR22
Amplitude Balance	925. to 960. MHz	-1.0	-0.1	1.0	dB	
Phase Balance	925. to 960. MHz	175	179	185	deg.	
Absolute Attenuation	10. to 824. MHz	50	64		dB	
	824. to 880. MHz	50	64		dB	
	880. to 915. MHz	50	54		dB	
	880.48 to 914.52 MHz	50	54		dB	
	980. to 1060. MHz	23	29		dB	
	1060. to 2400. MHz	30	62		dB	
	2400. to 2500. MHz	50	68		dB	
	2500. to 6000. MHz	30	55		dB	

* Typical value at 25±2deg.C

All Rights Reserved, Copyright© Murata Manufacturing Co., Ltd

Electrical Characteristic

< Single Filter >

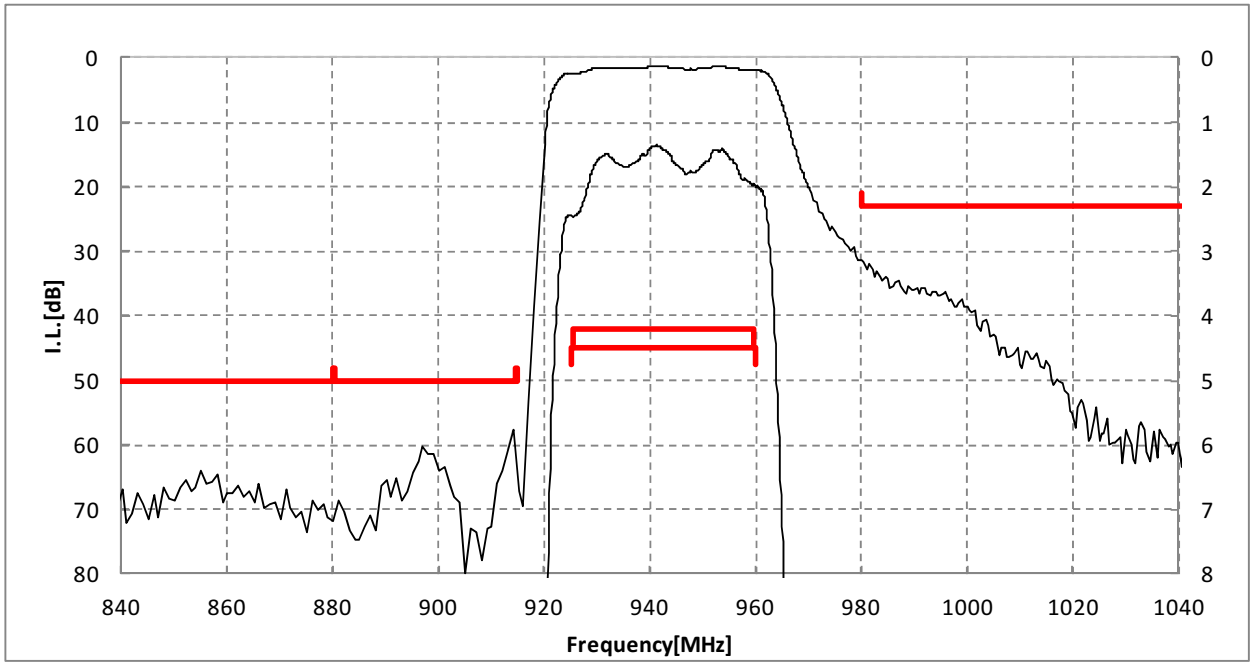

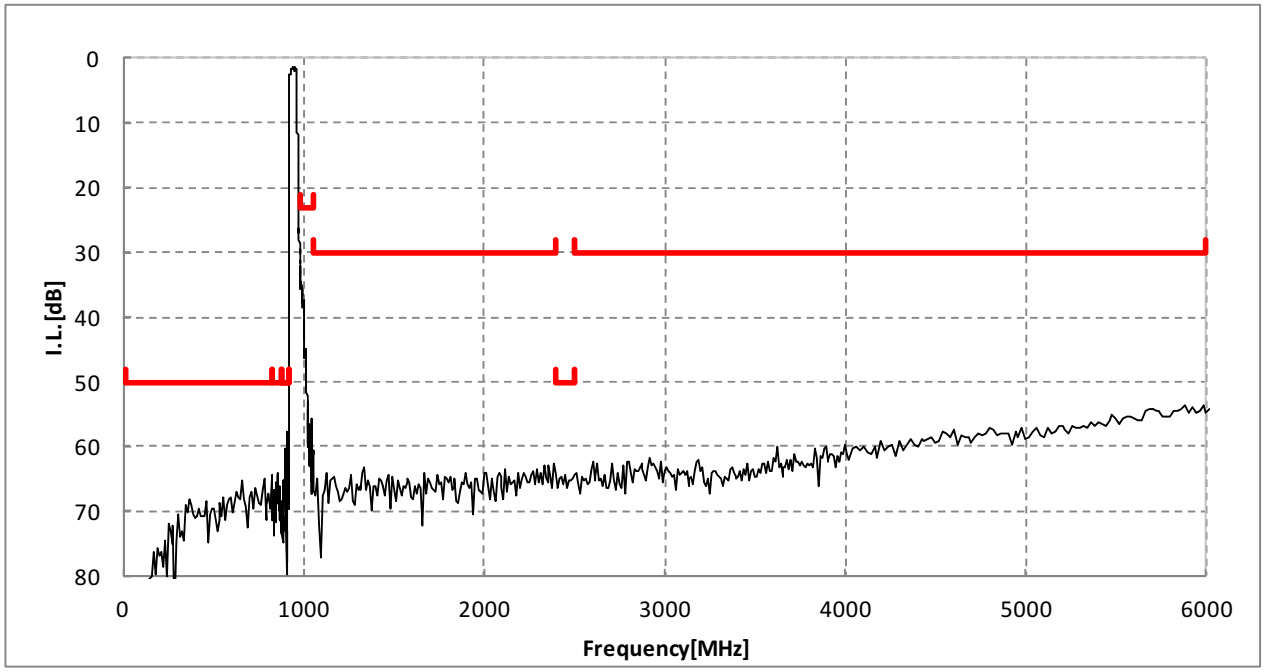

All Rights Reserved, Copyright© Murata Manufacturing Co., Ltd

Dimensions of Tape & Reel unit: mm

Carrier Tape

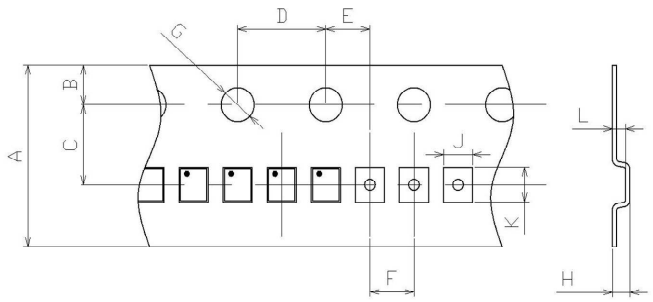

A:	8.0	J:	1.05
B:	1.75	K:	1.25
C:	3.50	L:	0.55
D:	4.0		
E:	2.00		
F:	2.0		
G:	φ1.5		
H:	0.75		

Tape

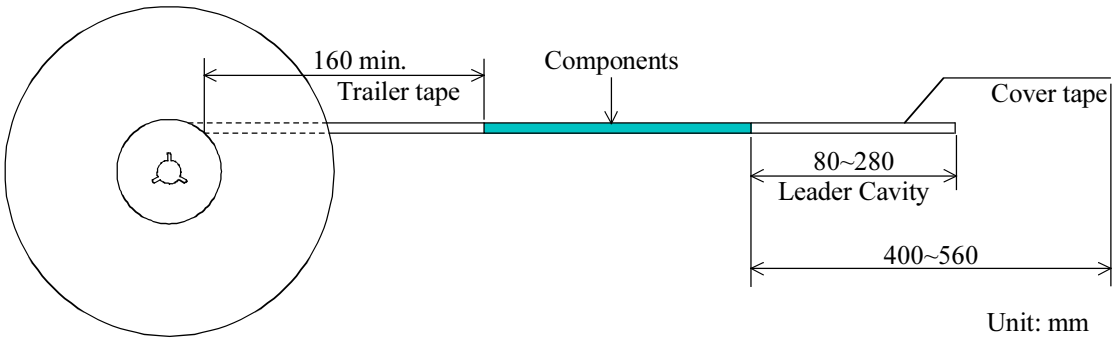

Reel

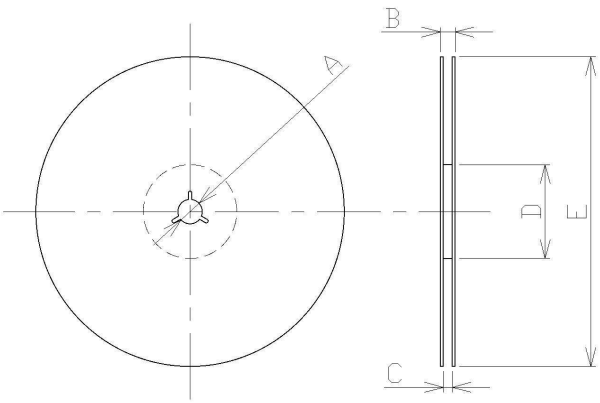

φ178Reel		φ330Reel	
A:	φ13.0	A:	-
B:	13.5max	B:	-
C:	9.0	C:	-
D:	φ60	D:	-
E:	φ178	E:	-

SAFFB942MFB0F0AR1X… 10000pcs (φ178)
SAFFB942MFB0F0AR1S… Sample Order (φ178/330)

All Rights Reserved, Copyright© Murata Manufacturing Co., Ltd

SAFFB942MFB0F0A (Band8 / Balanced / 5pin / 1109)

Marking Code

Table A: Month Code

2013	Jan.	Feb.	Mar.	Apr.	May.	Jun.	Jul.	Aug.	Sep.	Oct.	Nov.	Dec.
2017 2021	A	B	C	D	E	F	G	H	J	K	L	M
2014	Jan.	Feb.	Mar.	Apr.	May.	Jun.	Jul.	Aug.	Sep.	Oct.	Nov.	Dec.
2018 2022	N	P	Q	R	S	T	U	V	W	X	Y	Z
2015	Jan.	Feb.	Mar.	Apr.	May.	Jun.	Jul.	Aug.	Sep.	Oct.	Nov.	Dec.
2019 2023	a	b	c̄	d	e	f	g	h	j	k	l	m
2016	Jan.	Feb.	Mar.	Apr.	May.	Jun.	Jul.	Aug.	Sep.	Oct.	Nov.	Dec.
2020 2024	n	p	q	r	s	t	u	v	w	x	y	z

Table B: Date Code

date	1st	2nd	3rd	4th	5th	6th	7th	8th	9th	10th	
code	A	B	C	D	E	F	G	H	J	K	
date	11th	12th	13th	14th	15th	16th	17th	18th	19th	20th	
code	L	M	N	P	Q	R	S	T	U	V	
date	21st	22nd	23rd	24th	25th	26th	27th	28th	29th	30th	31st
code	W	X	Y	Z	a	b	c̄	d	e	f	g

Important Notice (1/2)

PLEASE READ THIS NOTICE BEFORE USING OUR PRODUCTS.

Please make sure that your product has been evaluated and confirmed from the aspect of the fitness for the specifications of our product when our product is mounted to your product.
All the items and parameters in this product specification/datasheet/catalog have been prescribed on the premise that our product is used for the purpose, under the condition and in the environment specified in this specification. You are requested not to use our product deviating from the condition and the environment specified in this specification.
Please note that the only warranty that we provide regarding the products is its conformance to the specifications provided herein. Accordingly, we shall not be responsible for any defects in products or equipment incorporating such products, which are caused under the conditions other than those specified in this specification.

WE HEREBY DISCLAIMS ALL OTHER WARRANTIES REGARDING THE PRODUCTS, EXPRESS OR IMPLIED, INCLUDING WITHOUT LIMITATION ANY WARRANTY OF FITNESS FOR A PARTICULAR PURPOSE, THAT THEY ARE DEFECT-FREE, OR AGAINST INFRINGEMENT OF INTELLECTUAL PROPERTY RIGHTS.

The product shall not be used in any application listed below which requires especially high reliability for the prevention of such defect as may directly cause damage to the third party's life, body or property. You acknowledge and agree that, if you use our products in such applications, we will not be responsible for any failure to meet such requirements.

Furthermore, YOU AGREE TO INDEMNIFY AND DEFEND US AND OUR AFFILIATES AGAINST ALL CLAIMS, DAMAGES, COSTS, AND EXPENSES THAT MAY BE INCURRED, INCLUDING WITHOUT LIMITATION, ATTORNEY FEES AND COSTS, DUE TO THE USE OF OUR PRODUCTS IN SUCH APPLICATIONS.

All Rights Reserved, Copyright© Murata Manufacturing Co., Ltd

Important Notice (2/2)

- Aircraft equipment.
- Aerospace equipment
- Undersea equipment.
- Power plant control equipment - Medical equipment.
- Transportation equipment (vehicles, trains, ships, elevator, etc.).
- Traffic signal equipment.
- Disaster prevention / crime prevention equipment.
- Burning / explosion control equipment
- Application of similar complexity and/ or reliability requirements to the applications listed in the above.

We expressly prohibit you from analyzing, breaking, Reverse-Engineering, remodeling altering, and reproducing our product. Our product cannot be used for the product which is prohibited from being manufactured, used, and sold by the regulations and laws in the world.

Please do not use the product in molding condition.

This product is ESD (ElectroStatic Discharge) sensitive device.
When you install or measure this, you should be careful not to add antistatic electricity or high voltage.
Please be advised that you had better check anti serge voltage.

We do not warrant or represent that any license, either express or implied, is granted under any our patent right, copyright, mask work right, or our other intellectual property right relating to any combination, machine, or process in which our products or services are used. Information provided by us regarding third-party products or services does not constitute a license from us to use such products or services or a warranty or endorsement thereof. Use of such information may require a license from a third party under the patents or other intellectual property of the third party, or a license from us under our patents or other intellectual property.

Please do not use our products, our technical information and other data provided by us for the purpose of developing of mass-destruction weapons and the purpose of military use.
Moreover, you must comply with "foreign exchange and foreign trade law", the "U.S. export administration regulations", etc.

Please note that we may discontinue the manufacture of our products, due to reasons such as end of supply of materials and/or components from our suppliers.

Customer acknowledges that Murata will, if requested by you, conduct a failure analysis for defect or alleged defect of Products only at the level required for consumer grade Products, and thus such analysis may not always be available or be in accordance with your request (for example, in cases where the defect was caused by components in Products supplied to Murata from a third party).

The product shall not be used in any other application/model than that of claimed to Murata.

Customer acknowledges that engineering samples may deviate from specifications and may contain defects due to their development status.
We reject any liability or product warranty for engineering samples.
In particular we disclaim liability for damages caused by

・the use of the engineering sample other than for evaluation purposes, particularly the installation or integration in the product to be sold by you,

・deviation or lapse in function of engineering sample,

・improper use of engineering samples.

We disclaim any liability for consequential and incidental damages.
If you can’t agree the above contents, you should inquire our sales.

All Rights Reserved, Copyright© Murata Manufacturing Co., Ltd