Datasheet of SAW Device

SAW Dual Filter

for Band1_Band21 / 1in2out Unbalanced / HL /1511

Murata PN: SAWFD1G50AB0F0A

■ Feature

- For CA

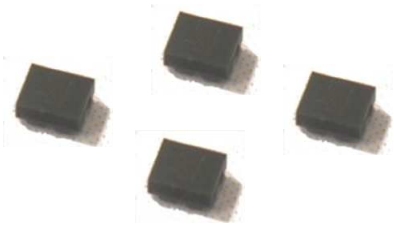

Note : This Murata SAW Component is Consumer grade product and applicable for Cellular phone or similar end devices.
Please also read Important Notice at the end of this document.

Revision
G

- Operating temperature : -20 to +85 deg.C
- Storage temperature : -40 to +85 deg.C
- Input Power : +13 dBm 2000 h
- D.C. Volatage between the terminals : 3V (25+/-2 deg.C)
- Minimum Resistance between the terminals : 10M ohm
- RoHS compliance : Yes
- ESD (ElectroStatic Discharge) sensitive device

Package Dimensions & Recommended Land Pattern

unit: mm

Dimensions

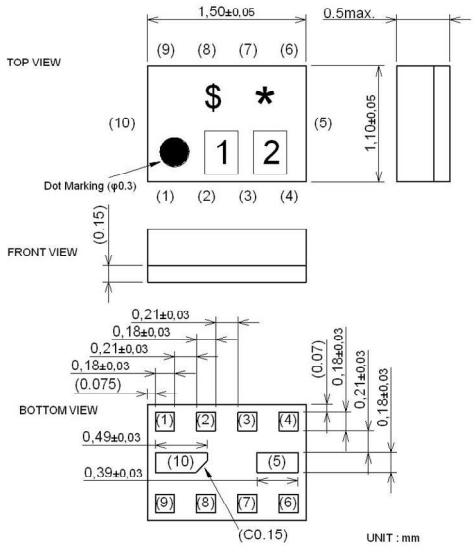

Marking : Laser Printing
- * : Month code
- $: Date code
- 1 : 3
- 2 : H

Terminal Number
- (1) : Unbalanced port-Lch/Hch
- (6) : Unbalanced port-Lch
- (9) : Unbalanced port-Hch
- Others : GND

Notice) Please refer to Measurement Circuit for Port information in detail.

Land Pattern

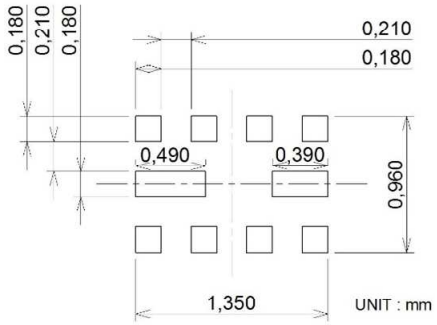

Measurement Circuit (Top Thru View)

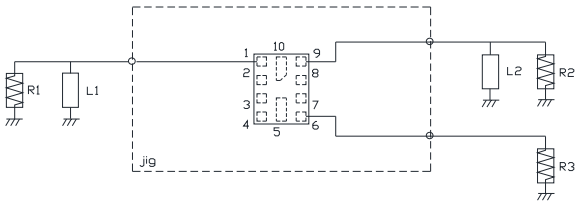

(Hch)	R1 : 50 ohm	L1 :5.6nH(Ideal inductor)
	R2 : 50 ohm	L2 :18nH(Ideal inductor)
	R3 : 50 ohm	
(Lch)		

SAWFD1G50AB0F0A (Band1_Band21 / 1in2out Unbalanced / HL / 1511)

Electrical Characteristic < Low Freq. Filter >

Low Freq. Filter						Characteristics (-20 to +85 deg.C) min.	typ.*	max.	Unit	Note
Center Frequency							1503.4		MHz	
Insertion Loss	1495.9	to	1510.9	MHz			1.8	2.3	dB	
	1495.9	to	1510.9	MHz			1.8	2.0	dB	+23 to +27deg.C
Ripple Deviation	1495.9	to	1510.9	MHz			0.4	1.2	dB	
VSWR	1495.9	to	1510.9	MHz			1.3	2.0		
Absolute Attenuation	1.	to	1447.9	MHz		45	50		dB	
			48.	MHz		60	90		dB	RX - TX
	1447.9	to	1462.9	MHz		46	52		dB	TX
	1472.	to	1480.	MHz		3.0	8.0		dB	(RX + TX)/2
	1596.	to	6044.	MHz		33	39		dB	
	1920.	to	1980.	MHz		45	53		dB	B1 TX
	2400.	to	2500.	MHz		45	53		dB	2.4GHz ISM
	4900.	to	5950.	MHz		35	39		dB	5GHz ISM
	4487.7	to	4532.7	MHz		35	41		dB	3f
	5984.	to	6044.	MHz		35	39		dB	4f
	6044.	to	12750.	MHz		3.0	8.0		dB	
	7480.	to	7555.	MHz		25	34		dB	5f
	8975.	to	9065.	MHz		8.0	15.0		dB	6f
	10471.	to	10576.	MHz		5.0	11.0		dB	7f
	11967.	to	12087.	MHz		3.0	8.0		dB	8f

* Typical value at 25±2deg.C

SAWFD1G50AB0F0A (Band1_Band21 / 1in2out Unbalanced / HL / 1511)

Electrical Characteristic < High Freq. Filter >

High Freq. Filter					Characteristics (-20 to +85 deg.C) min.	typ.*	max.	Unit	Note
Center Frequency						2140		MHz	
Insertion Loss	2110.	to	2170.	MHz		1.8	2.4	dB	
	2110.	to	2170.	MHz		1.8	2.1	dB	+23 to +27deg.C
	2112.5	to	2167.5	MHz		1.8	2.3	dB_{INT}	Any 4.5MHz
Ripple Deviation	2110.	to	2170.	MHz		0.2	1.0	dB	Any 5MHz
VSWR	2110.	to	2170.	MHz		1.6	2.3		
Absolute Attenuation	10.	to	1920.	MHz	33	38		dB	
			190.	MHz	60	80		dB	Rx-Tx
			400.	MHz	50	63		dB	
	699.	to	716.	MHz	45	50		dB	B12Tx
	777.	to	787.	MHz	42	48		dB	B13Tx
	810.	to	830.	MHz	42	48		dB	
	814.	to	849.	MHz	42	47		dB	B26Tx
	824.	to	849.	MHz	42	47		dB	B5Tx
	880.	to	915.	MHz	40	46		dB	B8Tx
	898.	to	925.	MHz	40	46		dB	
	1447.9	to	1462.9	MHz	38	45		dB	B21Tx
	1710.	to	1785.	MHz	38	42		dB	B3Tx
	1730.	to	1920.	MHz	35	40		dB	2Tx-Rx
	1920.	to	1980.	MHz	40	44		dB	Tx
	2015.	to	2075.	MHz	12	16		dB	(Rx+Tx)/2
	2185.	to	6130.	MHz	1.5	3.0		dB	
	2400.	to	2500.	MHz	33	40		dB	2.4GHz ISM
	4030.	to	4150.	MHz	33	39		dB	Rx+Tx
	4220.	to	4340.	MHz	33	38		dB	2f
	4340.	to	13025.	MHz	15	20		dB	
	4900.	to	5950.	MHz	27	32		dB	5GHz ISM
	5950.	to	6130.	MHz	27	32		dB	Rx+2Tx
	6330.	to	6510.	MHz	27	31		dB	3f
	8440.	to	8680.	MHz	23	30		dB	4f
	10550.	to	10850.	MHz	15	21		dB	5f
	12660.	to	13020.	MHz	15	23		dB	6f

* Typical value at 25±2deg.C

Electrical Characteristic

< Low Freq. Filter >

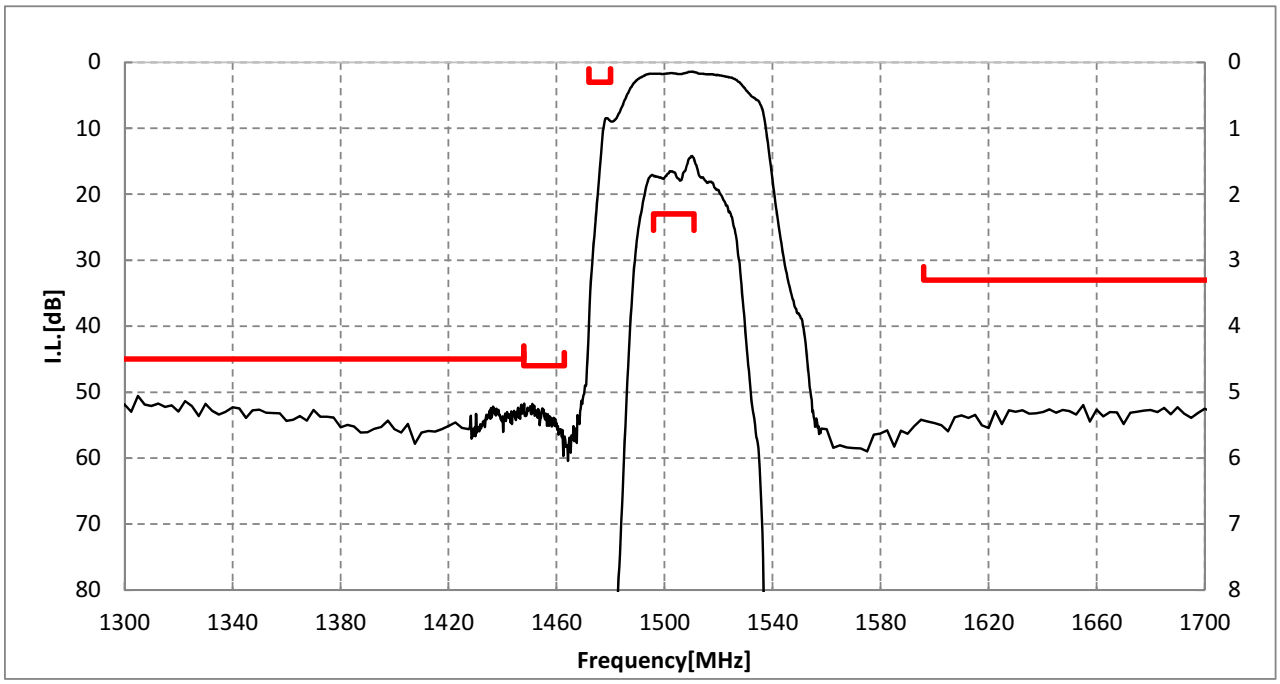

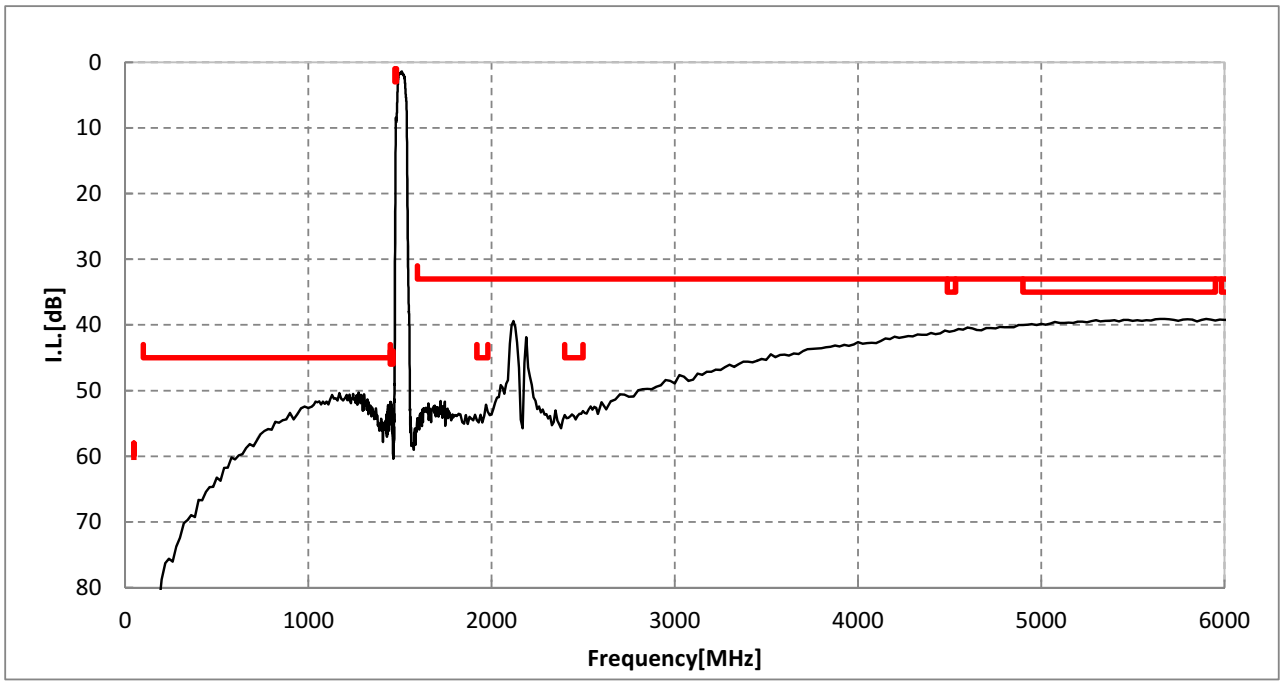

Electrical Characteristic

< High Freq. Filter >

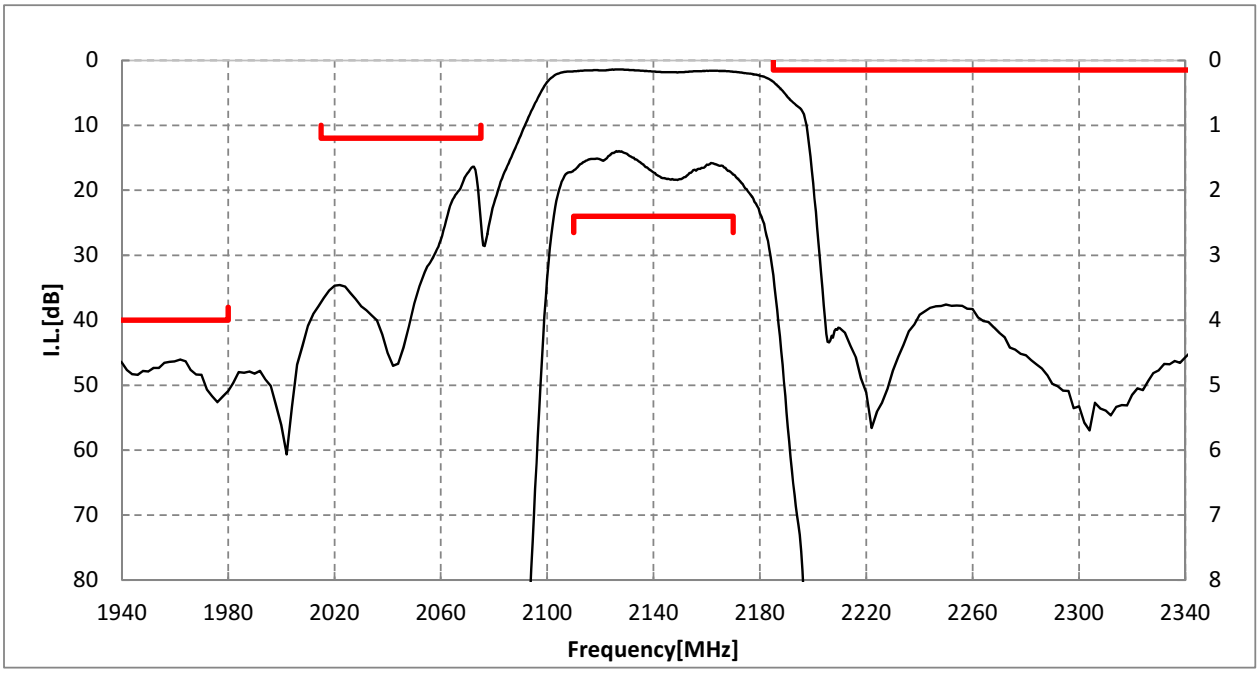

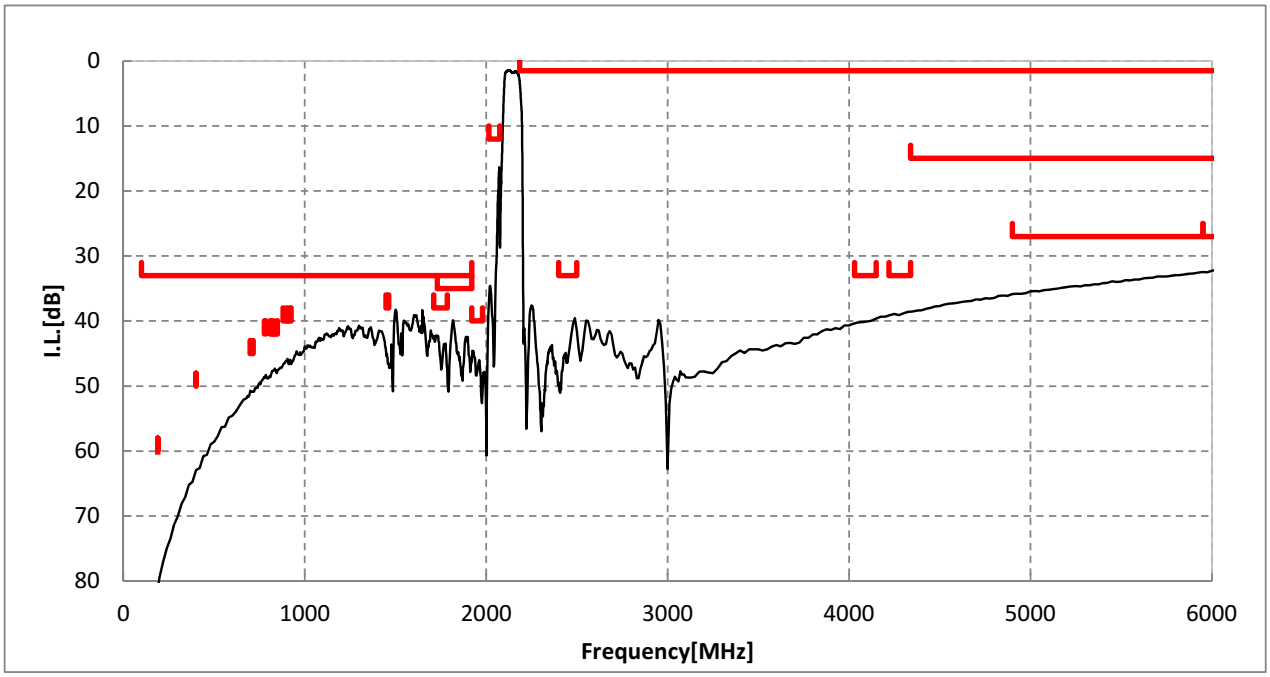

Dimensions of Tape & Reel unit: mm

Carrier Tape

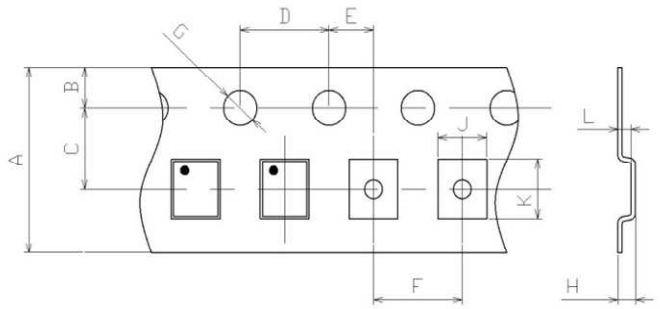

A:	8.0	J:	1.3
B:	1.75	K:	1.7
C:	3.50	L:	0.60
D:	4.0		
E:	2.00		
F:	4.0		
G:	φ1.5		
H:	0.90		

Tape

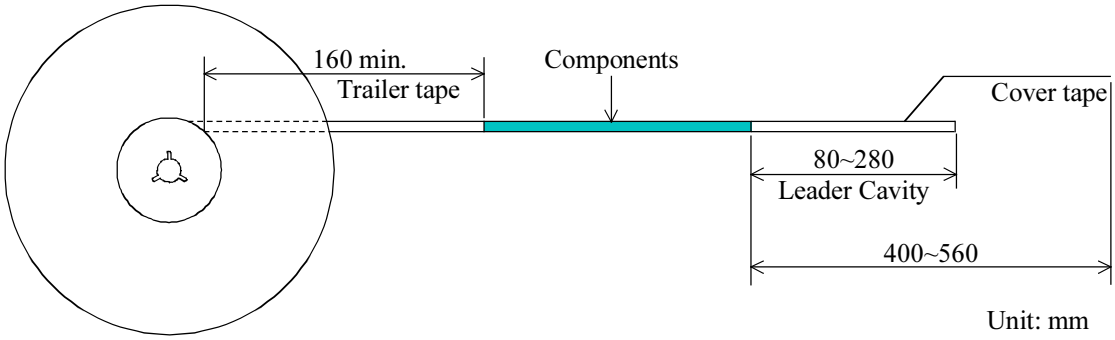

Reel

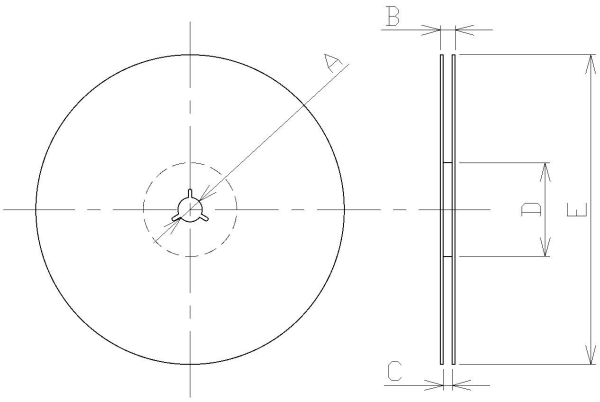

φ178Reel		φ330Reel	
A:	φ13.0	A:	φ13.0
B:	13.5max	B:	15.5max
C:	9.0	C:	9.5
D:	φ60	D:	φ100
E:	φ178	E:	φ330

SAWFD1G50AB0F0AR00… 10000pcs (φ330)
SAWFD1G50AB0F0AR1S… Sample Order (φ178/330)

Important Notice (1/2)

PLEASE READ THIS NOTICE BEFORE USING OUR PRODUCTS.

Please make sure that your product has been evaluated and confirmed from the aspect of the fitness for the specifications of our product specified in the front page of this product specifications (the "Product" or "Products") when our Product is mounted to your product.
All the items and parameters in this product specification/datasheet/catalog have been prescribed on the premise that our Product is used for the purpose, under the condition and in the environment specified in this specification. You are requested not to use our Product deviating from the condition and the environment specified in this specification.

Please note that the only warranty that we provide regarding the Product is its conformance to the specifications provided herein. Accordingly, we shall not be responsible for any defects in products or equipment incorporating such Products, which are caused under the conditions other than those specified in this specification.

WE HEREBY DISCLAIMS ALL OTHER WARRANTIES REGARDING THE PRODUCTS, EXPRESS OR IMPLIED, INCLUDING WITHOUT LIMITATION ANY WARRANTY OF FITNESS FOR A PARTICULAR PURPOSE, THAT THEY ARE DEFECT-FREE, OR AGAINST INFRINGEMENT OF INTELLECTUAL PROPERTY RIGHTS.

The Product shall not be used for any application which requires especially high reliability or accuracy in order to prevent defect which incurs high possibility of damage to the third party's life, body or property such as the applications listed below as item (a) to (j) (the “Prohibited Application”). You acknowledge and agree that, if you use our Products in the Prohibited Applications, we will not be responsible for any damage caused by such use.

Furthermore, YOU AGREE TO INDEMNIFY AND DEFEND US AND OUR AFFILIATES AGAINST ALL CLAIMS, DAMAGES, COSTS, AND EXPENSES THAT MAY BE INCURRED, INCLUDING WITHOUT LIMITATION, ATTORNEY FEES AND COSTS, DUE TO THE USE OF OUR PRODUCTS IN THE PROHIBITED APPLICATIONS.

(a) Aircraft equipment.
(b) Aerospace equipment
(c) Undersea equipment.
(d) Power plant control equipment
(e) Medical equipment.
(f) Transportation equipment (vehicles, automotive, trains, ships, etc.).
(g)Traffic signal equipment.
(h)Disaster prevention / crime prevention equipment.
(i) Burning / explosion control equipment
(j) Application of similar complexity and/ or reliability requirements to the applications listed in the above.

For the avoidance of doubt, the Product is not automotive grade, and will not support such requests for automotive as below, also not support other specific requests for automotive.

- AEC-Q200
- PPAP
- IATF16949,VDA6.3
- Zero Defect program
- Long product life cycle
- Automotive 8D failure analysis and report

Important Notice (2/2)

We expressly prohibit you from analyzing, breaking, Reverse-Engineering, remodeling altering, and reproducing our product. Our product cannot be used for the product which is prohibited from being manufactured, used, and sold by the regulations and laws in the world.

Please do not use the Product in molding condition.

This product is ESD (ElectroStatic Discharge) sensitive device.
When you install or measure this, you should be careful not to add antistatic electricity or high voltage.
Please be advised that you had better check anti serge voltage.

We do not warrant or represent that any license, either express or implied, is granted under any our patent right, copyright, mask work right, or our other intellectual property right relating to any combination, machine, or process in which our Products or services are used. Information provided by us regarding third-party products or services does not constitute a license from us to use such products or services or a warranty or endorsement thereof. Use of such information may require a license from a third party under the patents or other intellectual property of the third party, or a license from us under our patents or other intellectual property.

Please do not use our Products, our technical information and other data provided by us for the purpose of developing of mass-destruction weapons and the purpose of military use.
Moreover, you must comply with "foreign exchange and foreign trade law", the "U.S. export administration regulations", etc.

Please note that we may discontinue the manufacture of our products, due to reasons such as end of supply of materials and/or components from our suppliers.

Customer acknowledges that Murata will, if requested by you, conduct a failure analysis for defect or alleged defect of Products only at the level required for consumer grade Products, and thus such analysis may not always be available or be in accordance with your request (for example, in cases where the defect was caused by components in Products supplied to Murata from a third party).

The Product shall not be used in any other application/model than that of claimed to Murata.

Customer acknowledges that engineering samples may deviate from specifications and may contain defects due to their development status.
We reject any liability or product warranty for engineering samples.
In particular we disclaim liability for damages caused by

- the use of the engineering sample other than for evaluation purposes, particularly the installation or integration in the Product to be sold by you,
- deviation or lapse in function of engineering sample,
- improper use of engineering samples.

We disclaim any liability for consequential and incidental damages.
If you can’t agree the above contents, you should inquire our sales.