## 1. This specification shall be applied to the VARIABLE CAPACITOR.

LXRW0YV900-053

## 2. Features

- This device can carry out variable of the capacitor by adjusting the tuning voltage.
- This device can be used as a device for frequency adjustments of FeliCa(NFC) like switch IC(Capacitor embedded type) or a trimmer capacitor. Of course, other various cases can be used.

## 3. Part Number Configuration

| LXRW | 0Y | V | 900 | – | 053 |
|---|---|---|---|---|---|
| ① | ② | ③ | ④ | | ⑤ |

① Product ID（LXRW = Variable Capacitor）
② Dimension Code
③ Control Code
④ Capacitance
⑤ Serial Number

※RoHS Compliant
MSL 3
Halogen free
T/R only.

## 4. Construction, Dimensions

4-1. Dimensions

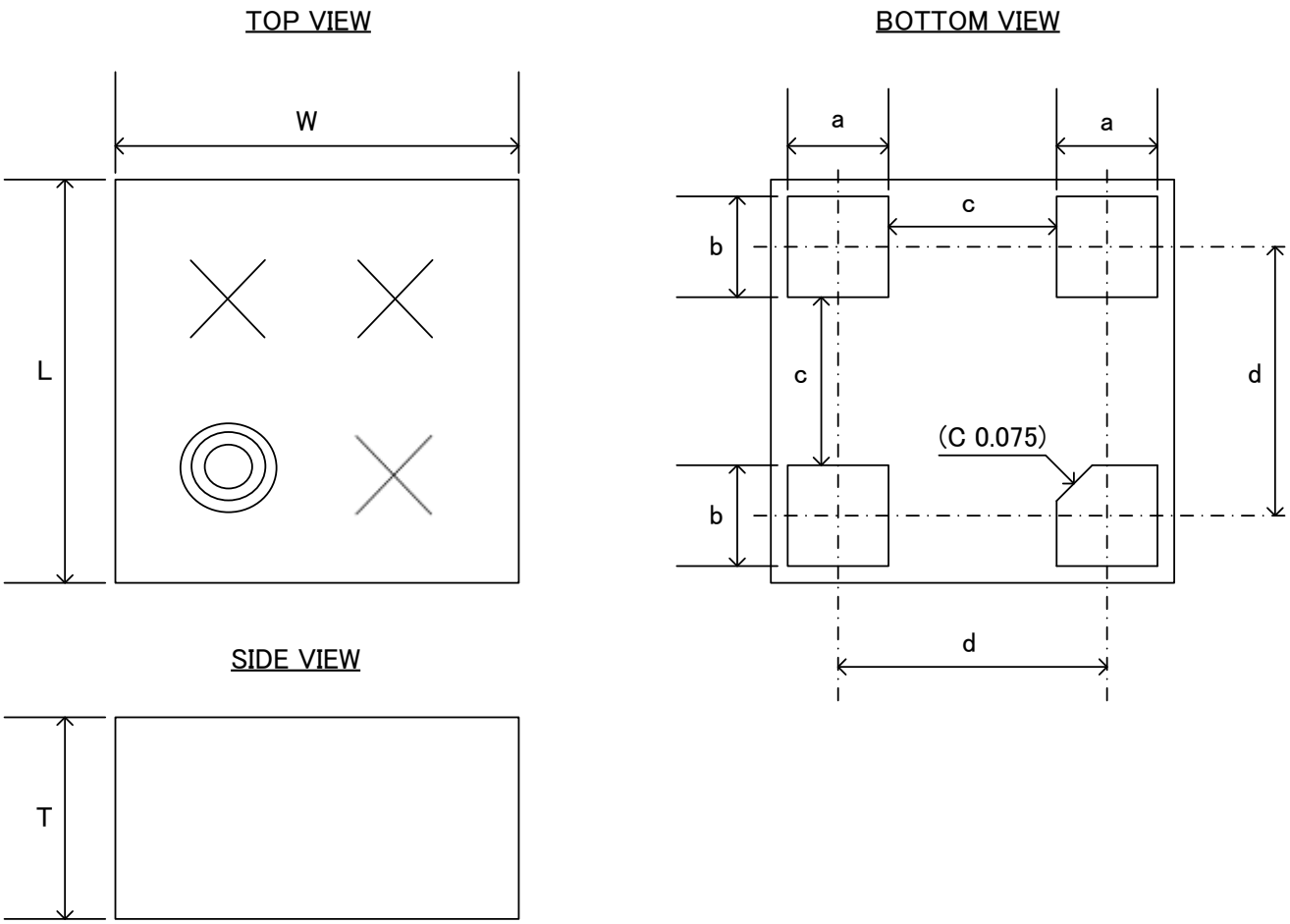


Unit : mm

| Mark | Size | Mark | Size |
|---|---|---|---|
| L | 0.6 +/- 0.05 | a | 0.15 +/- 0.015 |
| W | 0.6 +/- 0.05 | b | 0.15 +/- 0.015 |
| T | 0.3 MAX | c | (0.25) |
| | | d | (0.40) |

4-2. Pin assignments

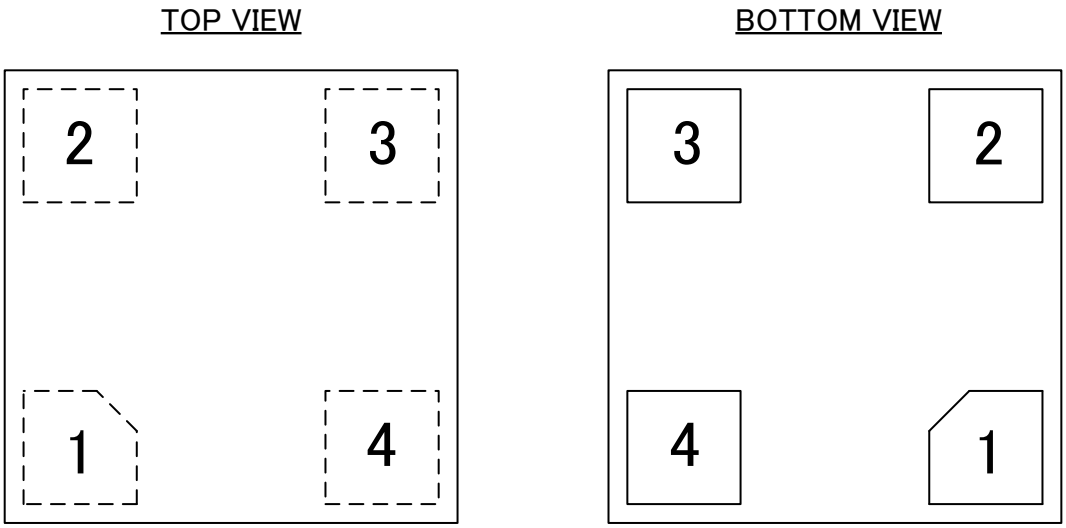


| Pin No. | Pin Name | Description |
|---|---|---|
| 1 | GND | Ground |
| 2 | Vt | V_tune |
| 3 | Port1 | RF port |
| 4 | Port2 | RF port |

## 5. Marking structure

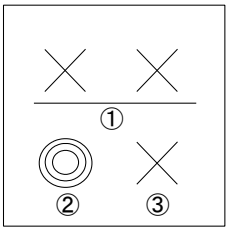


①Trace code
②1pin Mark
③Device code

## 6. Equivalent circuit

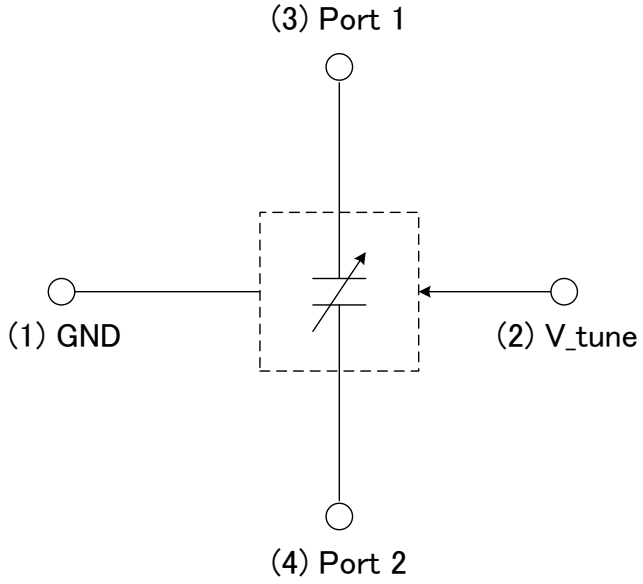


## 7. Characteristics

【ELECTRICAL CHARACTERISTICS】

7-1. Maximum ratings

| Rating | Symbol | Value | Unit |
|---|---|---|---|
| Continuous Tuning Voltage | $V_T$ | 3.2 | V |
| Rated Voltage | $V_{ac}$ | 50 | Vp-p |
| Operating Temperature | $T_{OP}$ | -30 to +85 | ºC |
| Storage Temperature | $T_{STO}$ | -40 to +85 | ºC |

7-2. Electrical characteristics (T=25 ºC)

| Parameter | Symbol | Conditions | MIN | TYP | MAX | Unit |
|---|---|---|---|---|---|---|
| Capacitance | $C_{vc}$ | $V_T$=0V f=1MHz | | 90 | | pF |
| | | $V_T$=3V f=1MHz | | 45 | | pF |

## 8. Capacitance characteristics（Typical）

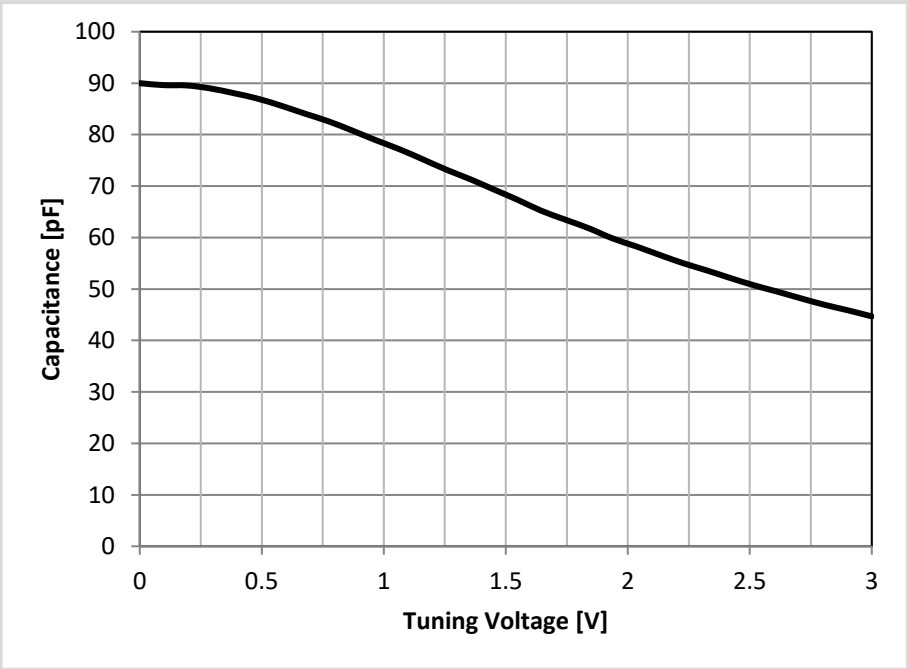

## 9. Application Circuit

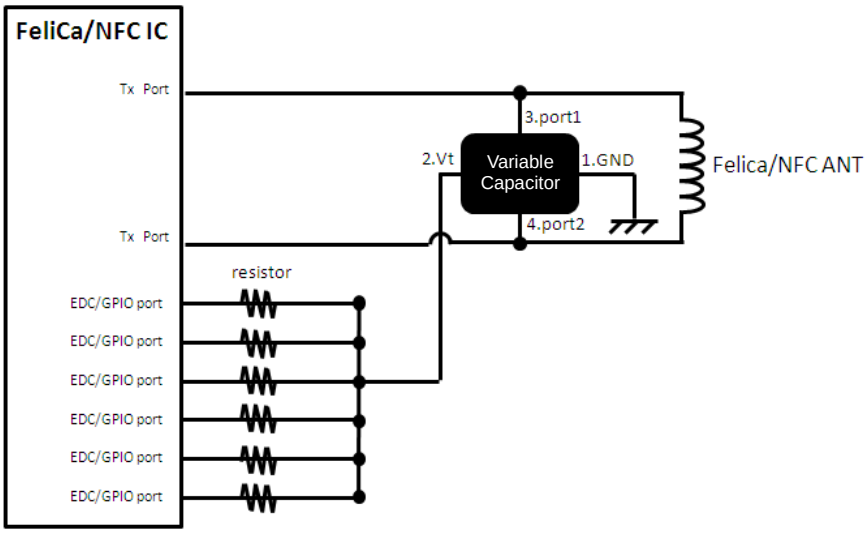


| Resister Value[Ω] | Number of EDC/GPIO port | | | |
|---|---|---|---|---|
| | 3port | 4port | 5port | 6port |
| R1 | 240K | 180K | 180K | 180K |
| R2 | 510K | 360K | 360K | 360K |
| R3 | 1M | 750K | 750K | 750K |
| R4 | - | 1.5M | 1.5M | 1.5M |
| R5 | - | - | 3.0M | 3.0M |
| R6 | - | - | - | 6.2M |

## 10. Reliability Test

【Mechanical Test】

| No. | Items | Specifications | Test Methods | Number | Result (Fail) |
|---|---|---|---|---|---|
| 1 | Vibration Resistance | No severe damages | Solder specimens on the testing jig (glass fluorine boards) shown in appended Fig.1 by a Pb free solder. The soldering shall be done either by iron or reflow and be conducted with care so that the soldering is uniform and free of defect such as by heat shock.<br><br>Frequency : 10～2000 Hz<br>Acceleration : 196 m/s$^2$<br>Direction : X,Y,Z 3 axis<br>Period : 2.5 h on each direction<br>Total 7.5 h. | 22 | G (0) |
| 2 | Shock | | Solder specimens on the testing jig shown in appended Fig.1 by an eutectic solder. The soldering shall be done either by iron or reflow and be conducted with care so that the soldering is uniform and free of defect such as by heat shock.<br>Acceleration : 981 m/s$^2$<br>Period : 6 ms.<br>Cycle : 6 axis ×10 times | 22 | G (0) |
| 3 | Deflection | | Solder specimens on the testing jig (glass epoxy boards) shown in appended Fig.2 by a Pb free solder. The soldering shall be done either by iron or reflow and be conducted with care so that the soldering is uniform and free of defect such as by heat shock.<br>No damage with 1.6mm deflection | 22 | G (0) |
| 4 | Soldering strength (Push Strength) | 2N Minimum | Solder specimens onto test jig shown below. Apply pushing force at 0.5mm/s until electrode pads are peeled off or product is broken. Pushing force is applied to longitudinal direction.<br> 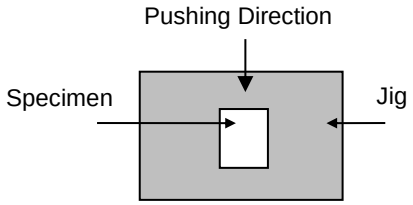 <br> | 22 | G (0) |
| 5 | Solderability of Termination | 95% of the terminations is to be soldered evenly and continuously. | Immerse specimens first an ethanol solution of rosin, then in a Pb free solder solution for 3±0.5 sec. at 245±5 °C.<br>Preheat : 150 °C, 60 sec.<br>Solder Paste : Sn-3.0Ag-0.5Cu<br>Flux : Solution of ethanol and rosin<br>(25 % rosin in weight proportion) | 22 | G (0) |
| 6 | Resistance to Soldering Heat (Reflow) | No severe damages<br><br>Satisfy specifications listed in paragraph 7-2 over operational temperature range | Preheat Temperature : 150-200 °C<br>Preheat Period : 60-120 sec.<br>High Temperature : 217 °C<br>High Temp. Period : 60-150 sec.<br>Peak Temperature : 255-260 °C<br><br>Specimens are soldered twice with the above condition, and then kept in room condition for 24 h before measurements. | 22 | G (0) |

| No. | Items | Specifications | Test Methods | Number | Result (Fail) |
|---|---|---|---|---|---|
| 7 | Chip Place Test | No severe damages<br><br>Satisfy specifications listed in paragraph 7-2 over operational temperature range | Nozzle: Buffing Nozzle (With shock absorption mechanism)<br>diameter (vacuum): φ0.4 mm<br>Push quantity: +0.4 mm<br>Loading:13 N(max) | 22 | G (0) |

【Environmental Test】

| No. | Items | Specifications | Test Methods | Number | Result (Fail) |
|---|---|---|---|---|---|
| 8 | High Temp. Exposure | No severe damages<br><br>Satisfy specifications listed in paragraph 7-2 over operational temperature range | Temperature : 85±2 °C<br>Period : 500+48/-0 h<br>Room Condition : 2 ～ 24 h | 22 | G (0) |
| 9 | Temperature Cycle | | Set the specimens to the supporting jig in the same manner and under the same conditions as Fig.1 and conduct the 100 cycles according to the temperatures and time shown in the following table. Set it for 2 to 24 h at room temperature, then measure.<br><br>Step / Temp(°C) / Time(min)<br>1 / Min. Operating Temp.+0/-3 / 30±3<br>2 / Max. Operating Temp.+3/-0 / 30±3 | 22 | G (0) |
| 10 | Humidity (Steady State) | | Temperature : 40±2 °C<br>Humidity : 80~90 %RH<br>Period : 500±12 h<br>Room Condition : 2~24 h | 22 | G (0) |
| 11 | Low Temp. Exposure | | Temperature : -40±2 °C<br>Period : 500+48/-0 h<br>Room Condition : 2~24 h | 22 | G (0) |
| 12 | ESD Machine Model | | C : 200pF<br>R : 0Ω<br>EST Voltage : +/-200V<br>Number of electric discharges: 1 | 10 | G (0) |
| 13 | ESD Human Body Model | | C : 100pF<br>R : 1500Ω<br>EST Voltage : +/-400V<br>Number of electric discharges: 1 | 10 | G (0) |

**Fig. 1**
Reference Land Pattern

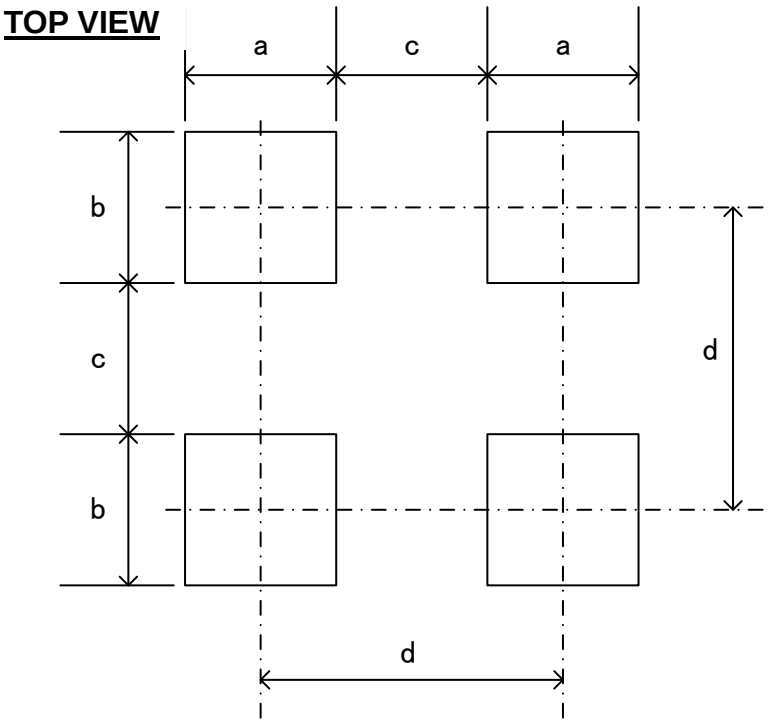


Unit: mm

| Mark | Size | Mark | Size |
|---|---|---|---|
| a | 0.20 | c | (0.2) |
| b | 0.20 | d | (0.4) |

This land pattern is for reference purpose only.

**Fig. 2**

Testing board

(Unit : mm)

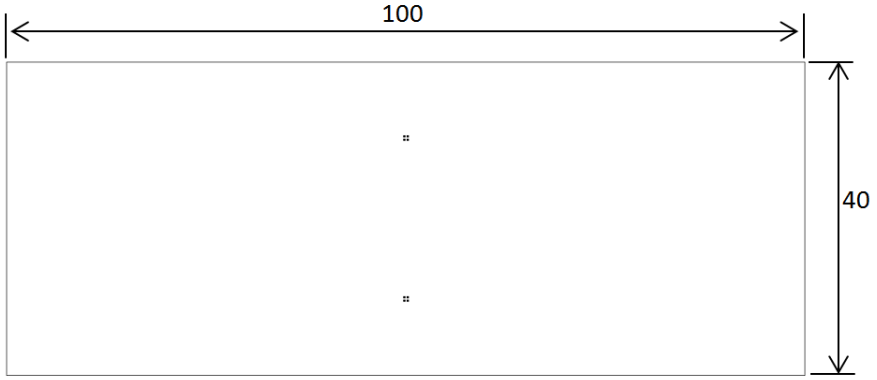


■ Land

Land pattern is same as figure1

Glass-fluorine board t=1.6mm

Copper thickness over 35 μm

Mounted situation

(Unit : mm)

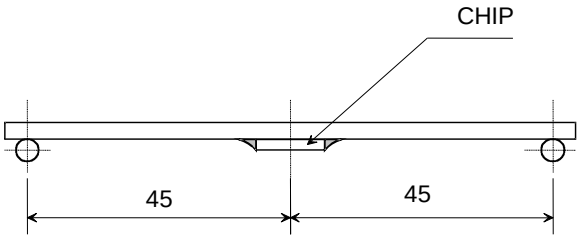


Test method

(Unit : mm)

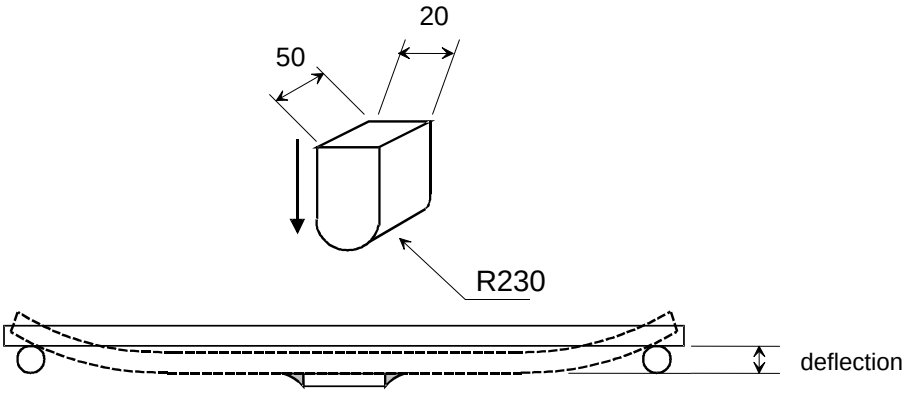

## 11. Tape and Reel Packing

### 11-1. Dimensions of Tape

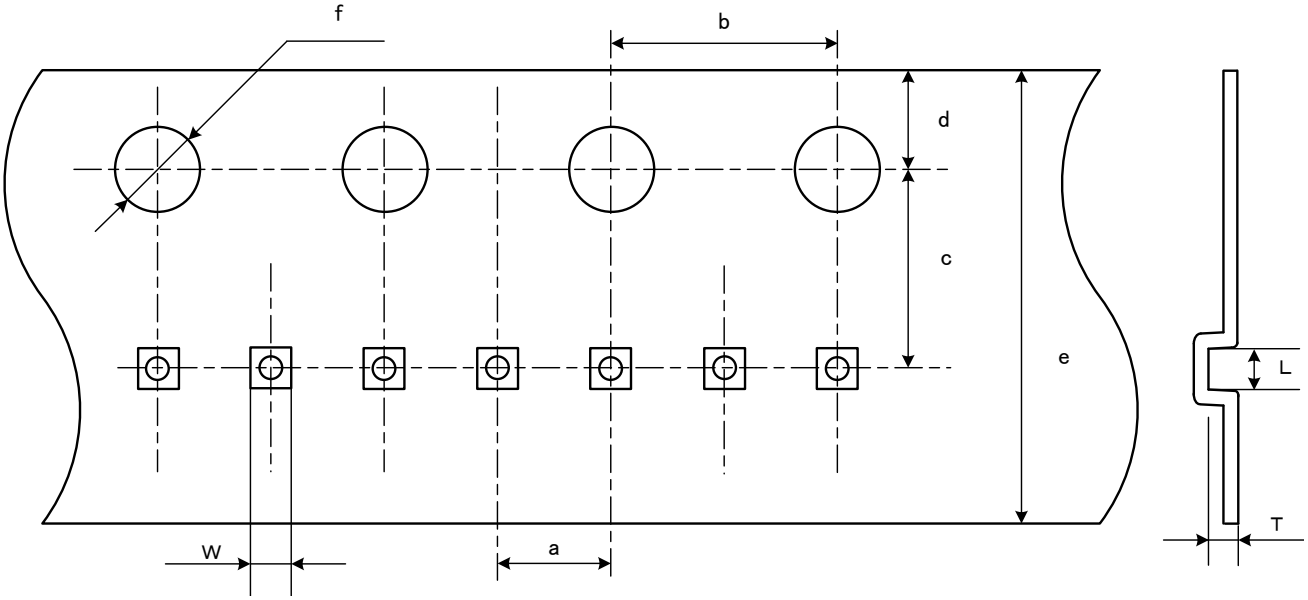


Feeding direction

(Unit : mm)

| Symbol | L | W | T | a | b | c | d | e | f |
|---|---|---|---|---|---|---|---|---|---|
| Size | (0.74) | (0.74) | 0.43max | 2.0+/-0.05 | 4.0+/-0.1 | (3.50) | 1.75+/-0.1 | 8.0+/-0.2 | φ1.5+/-0.1 |

### 11-2. Dimensions of Reel

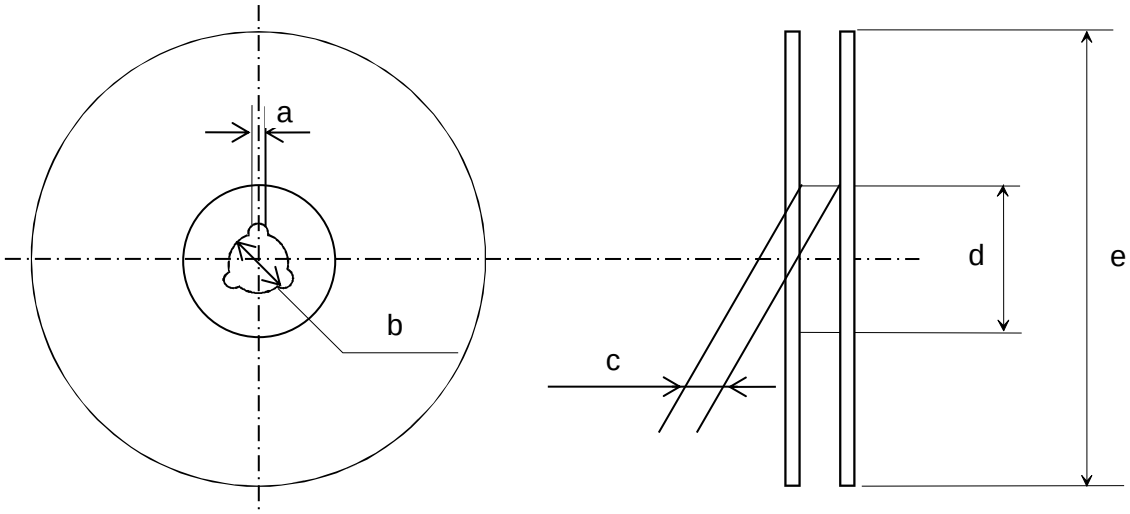


(Unit : mm)

| Symbol | a | b | c | d | e |
|---|---|---|---|---|---|
| Size | 1.5 min | φ13.0+/-0.2 | (9.0) | φ60 | φ180 |

11-3. Package Diagrams (Humidity proof Packing)

Tape and reel must be sealed with the anti-humidity plastic bag. The bag contains the desiccant and the humidity indicator.

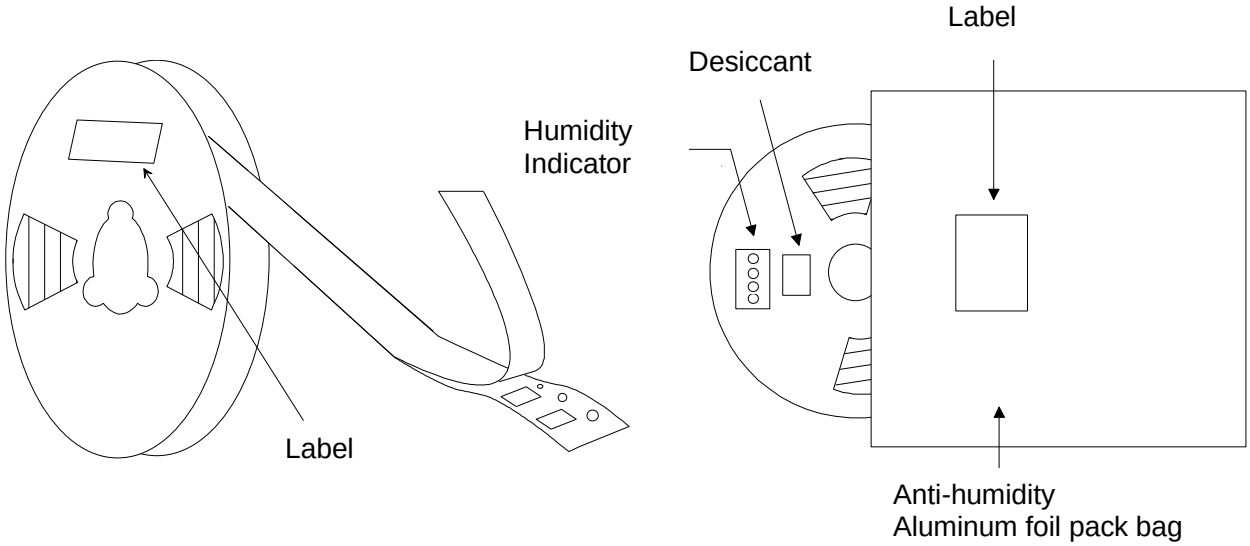


11-4. Taping Diagrams

[1] Feeding Hole : As specified in (1)

[2] Hole for chip : As specified in (1)

[3] Cover tape : 50um in thickness

[4] Base tape : As specified in (1)

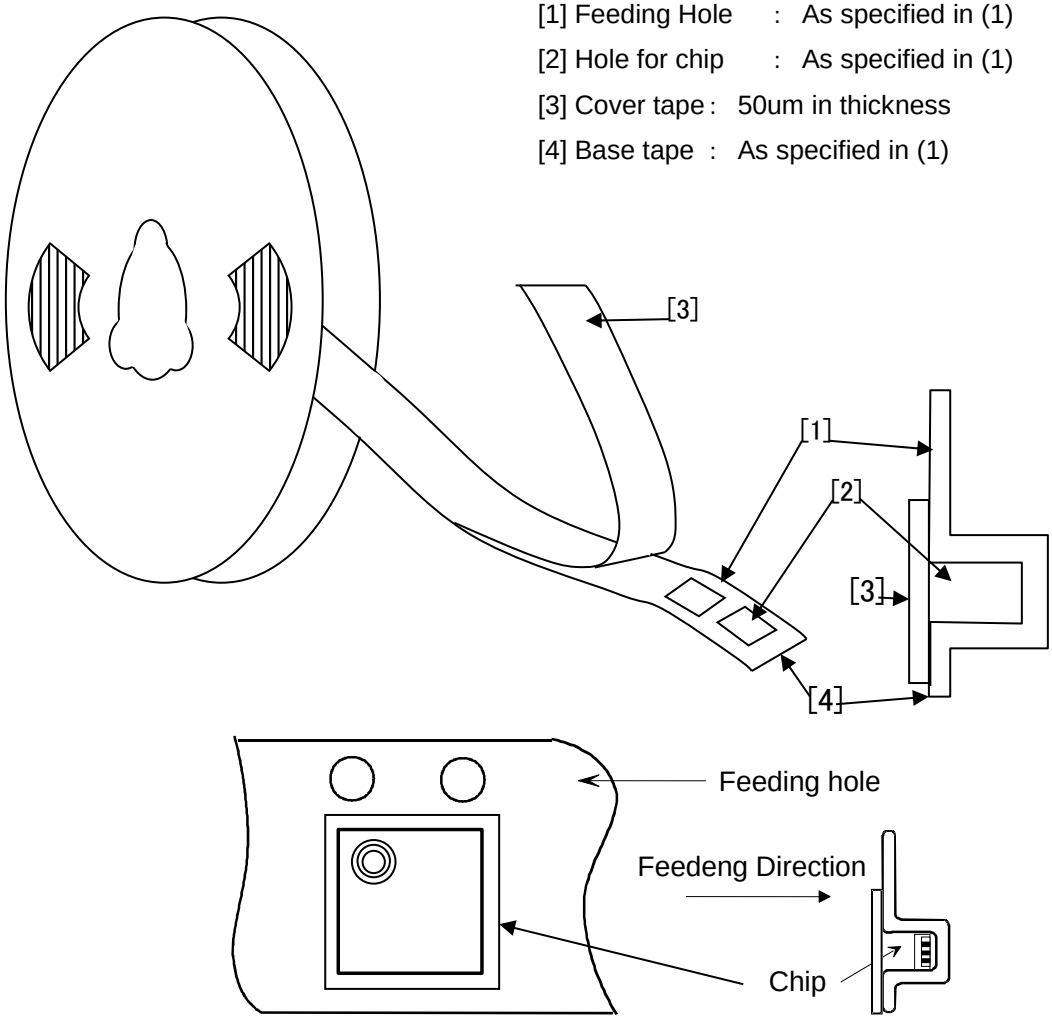

11-5. Leader and Tail tape

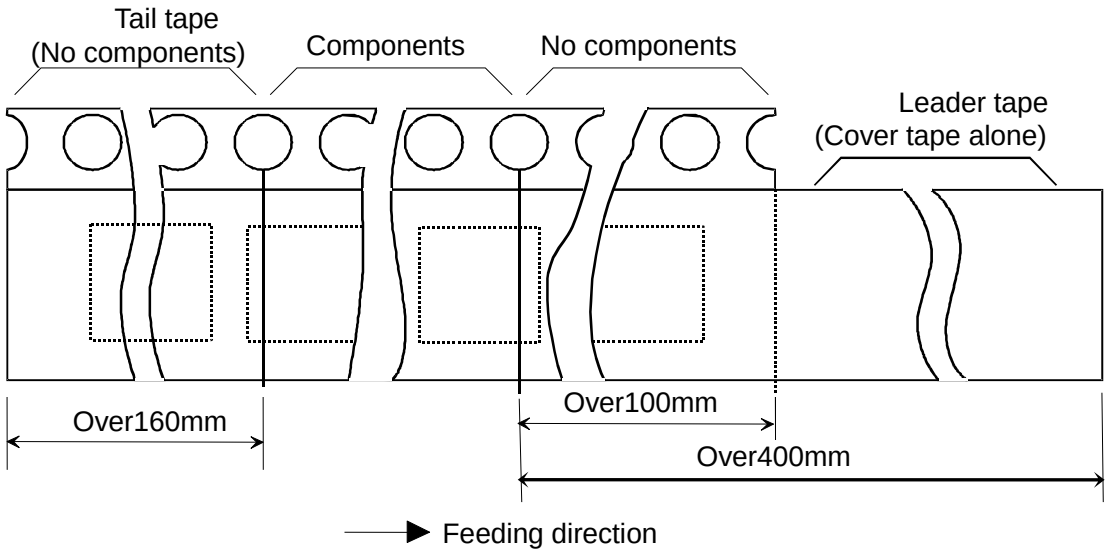


11-6. The tape for chips are wound clockwise, the feeding holes to the right side as the tape is pulled toward the user.

11-7. Packaging unit

3,000pcs./ reel

11-8. Material : Base tape ..... Plastic
Reel and Cover tape .....Plastic

Base tape, Reel and Cover tape have an anti-ESD function.

11-9. Peeling of force : 0.1~1.0 N in the direction of peeling as shown below.

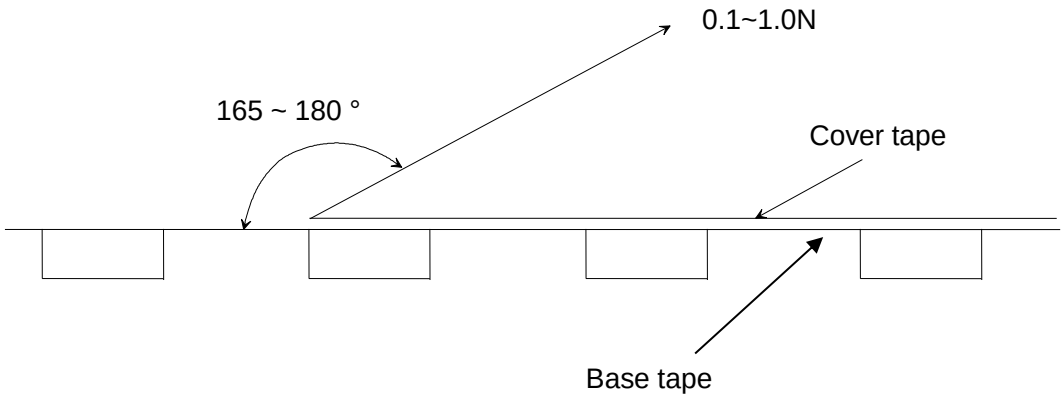

## Notice

### 1. Storage Conditions

・The product shall be stored without opening the packing under the ambient temperature from 5 to 35 deg.C and humidity from 20～70%RH.
(Packing materials, in particular, may be deformed at the temperature over 40 deg.C.)

・The product left more than 6 months after reception, it needs to be confirmed the solderbility before used.
- The product shall be stored in non corrosive gas ($Cl_2$, $NH_3$, $SO_2$, $No_x$, etc.).
- Any excess mechanical shock including, but not limited to, sticking the packing materials by sharp object and dropping the product, shall not be applied in order not to damage the packing materials.

・After the packing opened, the product shall be stored at ≦ 30 deg.C / ≦ 60 %RH and the product shall be used within 168 hours.

When the color of the indicator in the packing changed, the product shall be baked before soldering.

This product is applicable to MSL3 (Based on IPC/JEDEC J-STD-020)

### 2. Handling Conditions:

Be careful in handling or transporting products because excessive stress or mechanical shock may break products.

Handle with care if products may have cracks or damages on their terminals, the characteristics of products may change. Do not touch products with bear hands that may result in poor solderability.

### 3. Standard PCB Design (Land Pattern and Dimensions):

All the ground terminals should be connected to the ground patterns. Furthermore, the ground pattern should be provided between IN and OUT terminals. Please refer to the specifications for the standard land dimensions.

The recommended land pattern and dimensions is as Murata's standard. The characteristics of products may vary depending on the pattern drawing method, grounding method, land dimensions, land forming method of the NC terminals and the PCB material and thickness. Therefore, be sure to verify the characteristics in the actual set. When using non-standard lands, contact Murata beforehand.

### 4. Notice for Chip Placer:

When placing products on the PCB, products may be stressed and broken by uneven forces from a worn-out chucking locating claw or a suction nozzle. To prevent products from damages, be sure to follow the specifications for the maintenance of the chip placer being used. For the positioning of products on the PCB, be aware that mechanical chucking may damage products.

## 5. Soldering Conditions:

Carefully perform preheating so that the temperature difference (ΔT) between the solder and products surface should be in the following range. When products are immersed in solvent after mounting, pay special attention to maintain the temperature difference within 100 °C. Soldering must be carried out by the above mentioned conditions to prevent products from damage. Contact Murata before use if concerning other soldering conditions.

**Reflow soldering standard conditions(Example)**

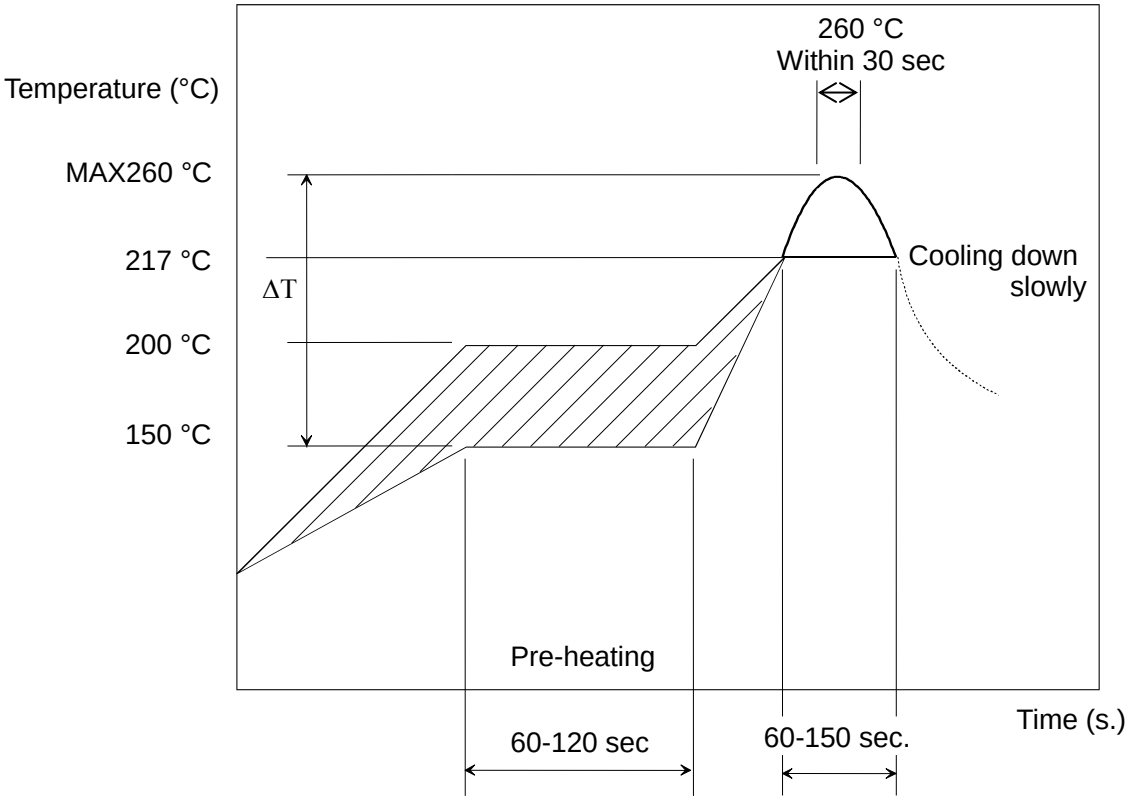


Atmosphere : N2
Use rosin type flux or weakly active flux with a chlorine content of 0.2 wt % or less

## 6. Cleaning Conditions:

Any cleaning is not permitted.

## 7. Operational Environment Conditions:

Products are designed to work for electronic products under normal environmental conditions (ambient temperature, humidity and pressure). Therefore, products have no problems to be used under the similar conditions to the above-mentioned. However, if products are used under the following circumstances, it may damage products and leakage of electricity and abnormal temperature may occur.

- In an atmosphere containing corrosive gas ( $Cl_2$, $NH_3$, $SO_x$, $NO_x$ etc.).
- In an atmosphere containing combustible and volatile gases.
- In a dusty environment.
- Direct sunlight
- Water splashing place.
- Humid place where water condenses.
- In a freezing environment.

If there are possibilities for products to be used under the preceding clause, consult with Murata before actual use.

If product malfunctions may result in serious damage, including that to human life, sufficient fail-safe measures must be taken, including the following:
(1) Installation of protection circuits or other protective device to improve system safety
(2) Installation of redundant circuits in the case of single-circuit failure

## 8. Limitation of Applications:

The products are designed and produced for application in ordinary electronic equipment (AV equipment, OA equipment, telecommunication, etc). If the products are to be used in devices requiring extremely high reliability following the application listed below, you should consult with the Murata staff in advance.

- Aircraft equipment.
- Aerospace equipment
- Undersea equipment.
- Power plant control equipment.
- Medical equipment.
- Transportation equipment (vehicles, trains, ships, etc.).
- Traffic signal equipment.
- Disaster prevention / crime prevention equipment.
- Data-procession equipment.
- Application which malfunction or operational error may endanger human life and property of assets.
- Application which related to occurrence the serious damage
- Application of similar complexity and/ or reliability requirements to the applications listed in the above.

⚠ Note:

Please make sure that your product has been evaluated and confirmed against your specifications when our product is mounted to your product.

Product specifications are subject to change or our products in it may be discontinued without advance notice.

This catalog is for reference only and not an official product specification document, therefore, please review and approve our official product specification before ordering this product.