Application Example 1

In-Vehicle Infotainment

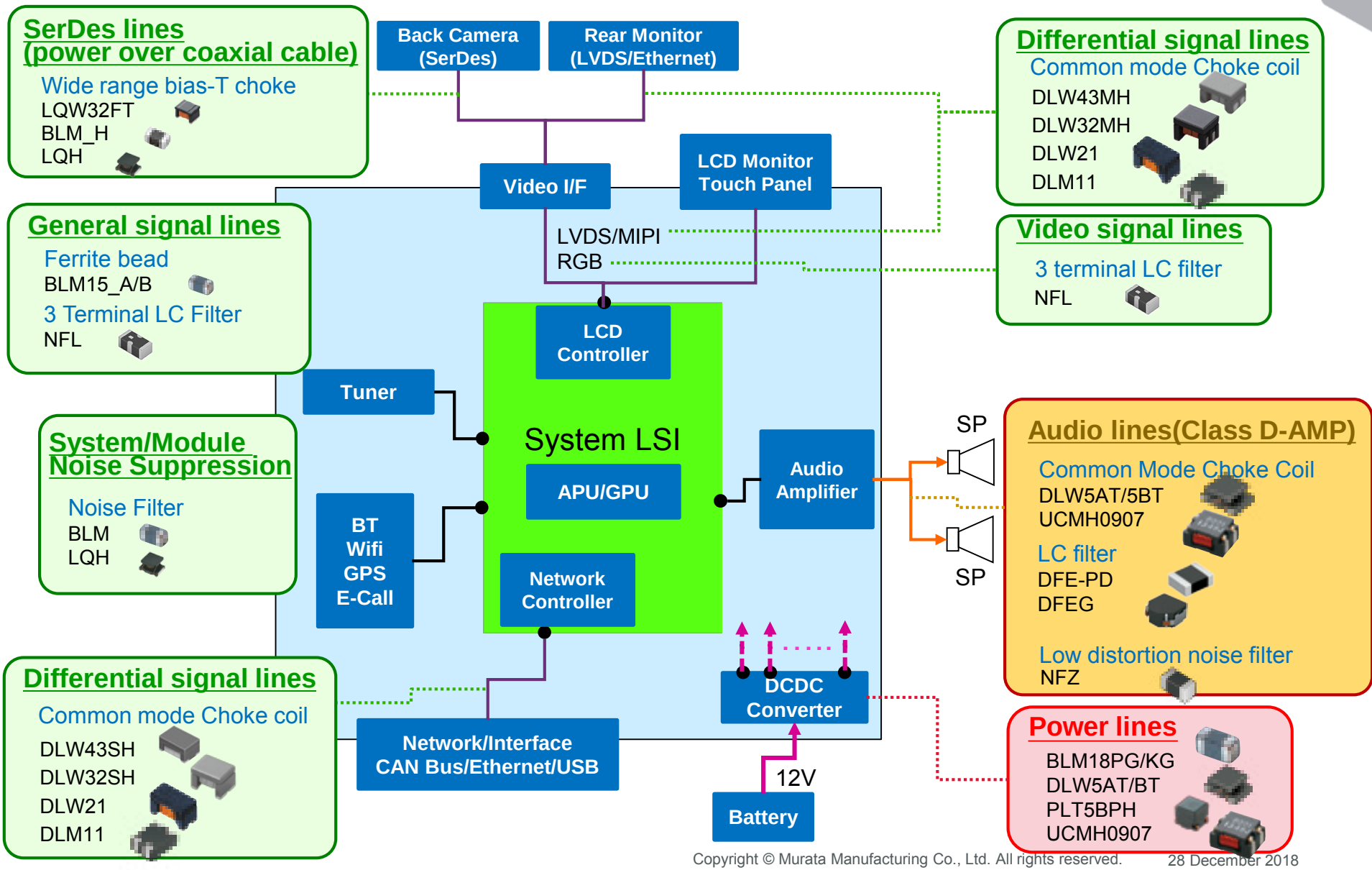

Copyright © Murata Manufacturing Co., Ltd. All rights reserved.