OKY2-T/60-W12 Series

Programmable Output 60-Amp SMT PoL

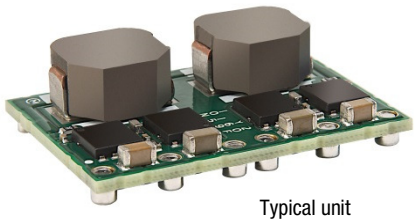

Typical unit

FEATURES

- 4.5-14Vdc input voltage range
- Programmable output voltage from 0.7-2.0Vdc
- Up to 60 Amps of output current
- Drives 20,000µF tantalum capacitive loads
- Surface mount package
- 1.3 x 0.9 x 0.38 inches (33.0 x 22.9 x 9.6 mm)
- High efficiency of 87.5%, (typical)
- Outstanding thermal derating performance
- Over temperature and over current protection
- Over voltage and under voltage protection
- On/Off control (Positive or Negative logic)
- Power Good signal
- Sequence/Tracking function
- Parallel operation up to 2 modules
- Optional SYNC/CLKOUT function
- RoHS-6 hazardous substance compliance

PRODUCT OVERVIEW

The OKY2-T/60-W12 series are miniature non-isolated Point-of-Load (PoL) DC-DC power converters for embedded applications. The tiny form factor measures only 1.3 x 0.9 x 0.38 inches (33.0 x 22.9 x 9.6 mm). Applications include powering CPU's, datacom/telecom systems, Distributed Bus Architectures (DBA), programmable logic and mixed voltage systems.

The converters have a wide input voltage range of 4.5 to 14Vdc and a maximum output current of 60 Amps. Based on a fixed frequency synchronous buck converter switching topology, this high power conversion efficient PoL module features resistor programmable output voltage, On/Off control, Power Good signal, sequence / tracking, parallel operation and optional SYNC/CLKOUT function.

These converters also include under voltage lock out (UVLO), output short circuit protection, over-current, over-temperature, over-voltage and under-voltage protection.

These units are designed to meet all standard UL/EN/IEC 60950-1 safety and FCC EMI/RFI emissions certifications and RoHS-6 hazardous substance compliance.

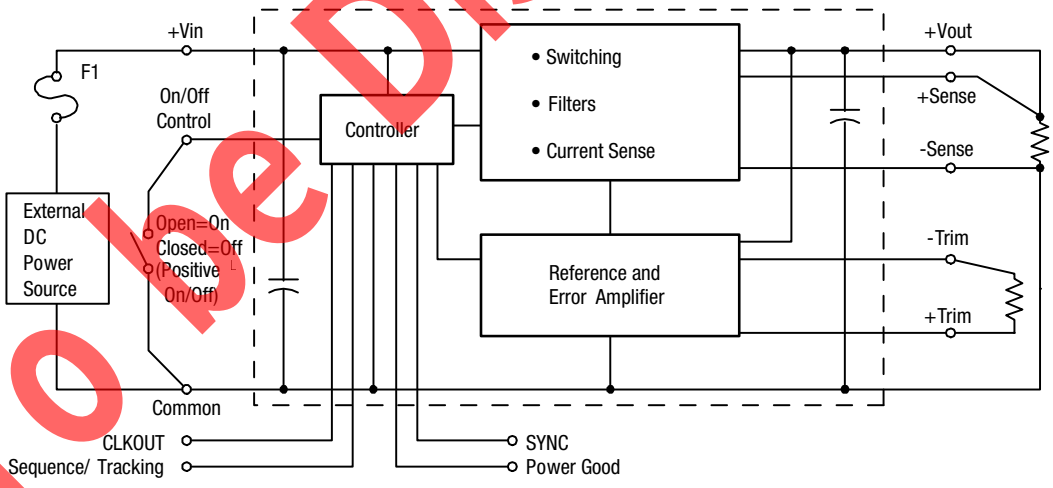

Figure 1. Connection Diagram

Typical topology is shown. Murata recommends an external fuse.

PERFORMANCE SPECIFICATIONS SUMMARY AND ORDERING GUIDE

Model Number	Output						Input				Efficiency (%)	On/Off Logic	SYNC	Package
	Vout (Vdc)	Iout (Amps,max)	Power (Watts)	R/N (mVp-p) Max.	Regulation (max.) Line (%)	Regulation (max.) Load (%)	Vin nom (Vdc)	Range (Vdc)	Iin, no load (mA)	Iin, full load (Amps)				inches (mm)
OKY2-T/60-W12PA-C	0.7-2.0	60	120	50	±0.25	±0.25	12	4.5-14	160	11.6	87.5	Pos.	Yes	1.30x0.9x0.38 (33.0x22.9x9.6)
OKY2-T/60-W12P-C	0.7-2.0	60	120	50	±0.25	±0.25	12	4.5-14	160	11.6	87.5	Pos.	No	1.30x0.9x0.38 (33.0x22.9x9.6)
OKY2-T/60-W12NA-C	0.7-2.0	60	120	50	±0.25	±0.25	12	4.5-14	160	11.6	87.5	Neg.	Yes	1.30x0.9x0.38 (33.0x22.9x9.6)
OKY2-T/60-W12N-C	0.7-2.0	60	120	50	±0.25	±0.25	12	4.5-14	160	11.6	87.5	Neg.	No	1.30x0.9x0.38 (33.0x22.9x9.6)

1. Please refer to the Part Number Structure for additional ordering information and options.
2. All specifications are at nominal line voltage, Vout=nominal (2.0V) and full load, +25°C unless otherwise noted. Output capacitors are 100 uF*1 ceramic and 470uF*10 tantalum (Panasonic POSCAP). Input cap is 22 uF*3 ceramic and 560uF*1 electrolytic (Panasonic OS- CON). See detailed specifications. I/O caps are necessary for our test equipment.
3. Use adequate ground plane and copper thickness adjacent to the converter.

PART NUMBER STRUCTURE

OKY2 - T / 60 - W12 N A - C

Okami Series
Non-isolated PoL
Y = Surface mount package
2 = Sequence/Tracking

T = Trimmable Output
Voltage Range: (0.7-2.0Vdc)

Maximum Rated Output
Current inAmps

Input Voltage Range:
W12 = 4.5-14Vdc (12Vdc nominal)

On/Off Control Logic
N = Negative
P = Positive

A = SYNC/CLKOUT (optional)

RoHS Hazardous Materials compliance
C = RoHS-6 (does not claim EU RoHS exemption 7b–lead in solder)

Product Marking

Because of the small size of these products, the product marking contains a character-reduced code to indicate the model number and manufacturing date code. Not all items on the marking are always used. Please note that the marking differs from the product photograph. Here is the layout of the Marking.

Model Number	Product Code	Rev Code
OKY2-T/60-W12PA-C	Y21160	2
OKY2-T/60-W12P-C	Y21160	1
OKY2-T/60-W12NA-C	Y20160	2
OKY2-T/60-W12N-C	Y20160	1

Layout

① ②③
④⑤⑥⑦
⑧⑨⑩⑪

Codes

① Rev code
②③④⑤⑥⑦ Product code
⑧⑨⑩⑪ Manufacturing date code

The marking contains three rows of information:

First and second row – Rev code and product code
Third row - Manufacturing date code

The manufacturing date code is four characters:

First character - Manufacturing information
Second character - Last digit of manufacturing year, example 2011
Third character - Month code (1 through 9 and O through D)
Fourth character - Day code (1 through 9 = 1 to 9, 10=O and 11 through 31 = A through Z)

FUNCTIONAL SPECIFICATIONS

ABSOLUTE MAXIMUM RATINGS	Conditions	Minimum	Typical/Nominal	Maximum	Units
Input Voltage, Continuous		-0.3		14	Vdc
ON/OFF Pin	Power on, referred to -Vin	-0.3		14	Vdc
SEQ Pin	Power on, referred to -Vin	-0.3		3	V
SYNC Pin	Power on, referred to -Vin	-0.3		6	V
SHARE/PGOOD/CLKOUT/±Trim Pins	Power on, referred to -Vin		Source ONLY		
Output Current	Current-limited, no damage, short-circuit protected	0		60	A
Storage Temperature Range	Vin = Zero (no power)	-55		125	°C
Absolute maximums are stress ratings. Exposure of devices to greater than any of these conditions may adversely affect long-term reliability. Proper operation under conditions other than those listed in the Performance/Functional Specifications Table is not implied or recommended.					
INPUT					
Operating Voltage Range		4.5	12	14	Vdc
Start-up threshold	Rising input voltage		4.3		Vdc
Undervoltage shutdown	Note 15		4.0		Vdc
Overvoltage shutdown			Vo*120%		Vdc
Internal Filter Type			Capacitive		
Input current					
Full Load Conditions	Vin = nominal		11.6		A
Low Line	Vin = minimum		30		A
No Load Current	Iout = minimum, unit = ON		160		mA
Shut-Down Mode Input Current			1		mA
Tracking/Sequencing					
Operating Voltage Range				3	V
Slew Rate (Power-Up)				2	V/ms
Slew Rate (Power-Down)				1	V/ms
Tracking accuracy, rising input			Vout = ±100mV of Sequence In (TYP)		
Tracking accuracy, falling input			Vout = ±200mV of Sequence In (TYP)		
GENERAL and SAFETY					
Efficiency	Vin =5V, Vout = 2V, full load		87.5		%
	Vin=5V,Vout=2V,Io=50A		90		
Safety	Certified to UL-60950-1, CSA-C22.2 No. 60950-1, IEC/EN60950-1, 2nd edition(pending)				
Calculated MTBF (Note 4a)	Per Telcordia SR-332 Issue 2, Method 1, Class 3, Ground Benign, Tambient =+25°C		322,334		Hours
Calculated MTBF (Note 4b)	Per Telcordia SR-332 Issue 3, Method 1, Class 3, Ground Benign, Tambient =+25°C		1,643,147		Hours
DYNAMIC CHARACTERISTICS					
Fixed Switching Frequency			310		kHz
Startup Time	Vout=nominal (Vin On to 90% of Vo)		4.5		mS
Startup Time	Vout=nominal (Remote On to 90% of Vo)		4.5		mS
Dynamic Load Response	(25-75% load step, di/dt)			2.5	A/µSec
Dynamic Load Peak Deviation	same as above		±3.0%		Voset
FEATURES					
Remote On/Off Control (Note 5)					
"N" suffix:					
Negative Logic, ON state	ON = Open pin or -0.3V to +0.6V. max.	-0.3		0.6	Vdc
Negative Logic, OFF state	OFF = +3.0Vmin. to +Vin max.	3.0		Vin max	Vdc
Control Current	Open collector/drain			3.3	mA
"P" suffix:					
Positive Logic, ON state	ON = +3.0Vmin. to +Vin max.	3.0		Vin max	V
Positive Logic, OFF state	OFF =Open or -0.3V to +0.6V.max.	-0.3		0.6	V
Control Current	Open collector/drain			3.3	mA
Power-Good Output (Pulled up to 5.4Vreg(TYP) internally)					
PGood TRUE (HI)			(Vset –13%) < Vout < (Vset +13%)		
PGood FALSE (LO)			Out of above range		
OPTIONS (OKY2-T/60-W12NA-C & OKY2-T/60-W12PA-C only)					
SYNC					
Input Voltage Range	Signal Low	-0.3		1.0	V
	Signal High	3.0		Vin max or to 5.8	V
Input Frequency Range			280 to 340		kHz
Input Wave Form (Note 18)			Square Plus Waveform (Duty cycle 20-80%)		
CLKOUT					
Output voltage range		-0.3		Vin max or to 5.8	V
Waveform			Square Plus Waveform		
Duty cycle			50		%

FUNCTIONAL SPECIFICATIONS (CONT.)

OUTPUT					
Total Output Power	See Derating	0		120	W
Voltage					
Output Voltage Range	Note 13	0.7		2	Vdc
Minimum Loading			None		
Accuracy (50% load, untrimmed)		±2.0% of Vnominal			Vdc
Overvoltage Protection	Note 16	>113%Vset(Hiccup),>120%Vset(Latch)			Vdc
Undervoltage Protection		<87%Vset(Hiccup)			Vdc
Current					
Output Current Range		0		60	A
Current Limit Inception	98% of Vnom., after warmup		100		A
Short Circuit					
Short Circuit Duration (remove short for recovery)	Output shorted to ground, no damage		Continuous		
Short circuit protection method			Current limiting		
Prebias Start-up		Converter will start up if the external output voltage is less than Vnominal.			
Regulation					
Line Regulation	Vin = min. to max., Vout = nom., Iout = nom.			±0.25	% of Vout
Ripple and Noise (20MHz bandwidth)	Note 8			50	mV pk-pk
Maximum Capacitive Loading (Note 14)	Cap-ESR>0.01 Ohms	4800	20000		µF
Parallel and SYNC operation					
Maximum parallel units (with SYNC)				2	Units
Maximum parallel units (w/o SYNC)				2	Units
Load Share Accuracy	Io=Iomax		90		%
External input frequency range (Note 18)		280		340	kHz
MECHANICAL					
Outline Dimensions	LxWxH		1.30x0.9x0.38		Inches
(Please refer to outline drawing)			33.0x22.9x9.6		mm
Weight			0.39		Ounces
			11.5		Grams
ENVIRONMENTAL					
Operating Ambient Temperature Range	With Derating (Note 9)	-40		85	°C
Storage Temperature	Vin = Zero (no power)	-55		125	°C
Thermal Protection/Shutdown	Measured in center		135		°C
Relative Humidity		To 85%/+85°C, non-condensing			
RoHS rating			RoHS-6		

Specification Notes

(1) Specifications are typical at +25°C, Vin=nominal (+12V.), Vout=nominal (+2V), full load, external caps and natural convection unless otherwise indicated. Extended tests at full power must supply substantial forced airflow. All models are tested and specified with external 100 uF*1 ceramic and 470uF*10 tantalum output capacitors and a 22 uF*3 ceramic and 560uF*1 electrolytic external input capacitor. All capacitors are low ESR types. These capacitors are necessary to accommodate our test equipment and may not be required to achieve specified performance in your applications. However, Murata recommends installation of these capacitors. All models are stable and regulate within spec under no-load conditions.

(2) Input Back Ripple Current is tested and specified over a 5 Hz to 20 MHz bandwidth. Input filtering is Cin=2 x 100 uF ceramic, Cbus=1000 uF electrolytic, Lbus=1 uH.

(3) Note that Maximum Power Derating curves indicate an average current at nominal input voltage. At higher temperatures and/or lower airflow, the DC/DC converter will tolerate brief full current outputs if the total RMS current over time does not exceed the Derating curve.

(4a) Mean Time Before Failure is calculated using the Telcordia (Belcore) Issue 2, Method 1, Case 3, Ground Benign conditions, Tpcboard = +25°C, full output load, natural air convection.

(4b) Mean Time Before Failure is calculated using the Telcordia (Belcore) Issue 3, Method 1, Case 3, Ground Benign conditions, Tpcboard = +25°C, full output load, natural air convection.

(5) The On/Off Control Input should use either a switch or an open collector/open drain transistor referenced to Input Common. A logic gate may also be used by applying appropriate external voltages which do not exceed +Vin

(6) Short circuit shutdown begins when the output voltage degrades approximately 2% from the selected setting.

(7) "Hiccup" overcurrent operation repeatedly attempts to restart the converter with a brief, full-current output. If the overcurrent condition still exists, the restart current will be removed and then tried again. This short current pulse prevents overheating and damaging the converter. Once the fault is removed, the converter immediately recovers normal operation.

(8) Output noise may be further reduced by adding an external filter. At zero output current, the output may contain low frequency components which exceed the ripple specification. The output may be operated indefinitely with no load.

(9) All models are fully operational and meet published specifications, including "cold start" at -40°C.

(10) Regulation specifications describe the deviation as the line input voltage or output load current is varied from a nominal midpoint value to either extreme.

(11) Other input or output voltage ranges will be reviewed under scheduled quantity special order.

(12) Maximum PC board temperature is measured with the sensor in the center of the converter.

(13) Do not exceed maximum power specifications when adjusting the output trim.

(14) The maximum output capacitive loads depend on the Equivalent Series Resistance (ESR) of the external output capacitor and, to a lesser extent, the distance and series impedance to the load. Larger caps will reduce output noise but may change the transient response. Newer ceramic caps with very low ESR may require lower capacitor values to avoid instability. Thoroughly test your capacitors in the application. Please refer to the Output Capacitive Load Application Note.

(15) Do not allow the input voltage to degrade lower than the input under voltage shutdown voltage at all times. Otherwise, you risk having the converter turn off. The under voltage shutdown is not latching and will attempt to recover when the input is brought back into normal operating range.

(16) The outputs are not intended to sink appreciable reverse current.

(17) "Hiccup" over current operation repeatedly attempts to restart the converter with a brief, full-current output If the over current condition still exists the restart current will be removed and then try again. This short current pulse prevents overheating and damaging the converter. Once the fault is removed, the converter immediately recovers normal operation.

(18) The switching frequency will lock to an external frequency (square pulse waveform), typically the CLKOUT signal from another converter or external clock. The internal oscillator synchronizes with the leading edge of the input signal.

PERFORMANCE DATA AND OSCILLOGRAMS

Efficiency vs. Line Voltage and Load Current @ +25°C. (Vout = 0.7V)

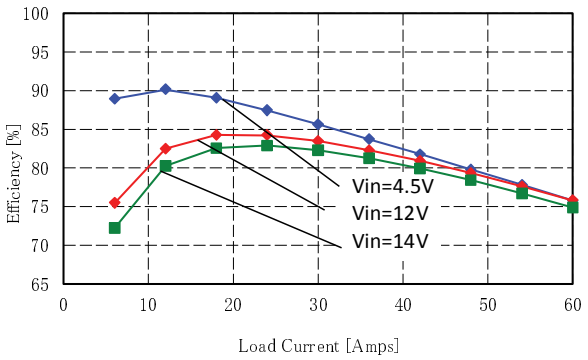

Maximum Current Temperature Derating at Sea Level (Vin=12V, Vout=0.7V)

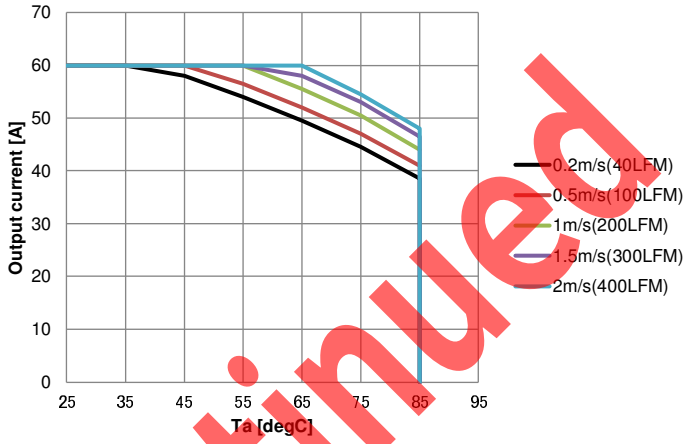

On/Off Enable Delay (Vin=12V, Vout=0.7V, Iout=60A, Cload=4800uF)
Trace1=Enable, Trace2=Vout

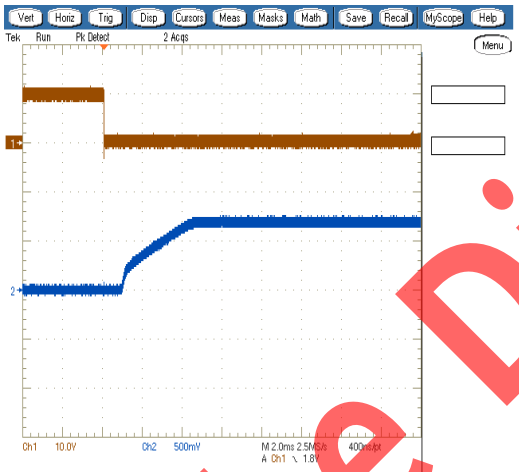

Output Ripple and Noise
(Vin=12V, Vout=0.7V, Iout=60A, Cload=4800uF, ScopeBW=20MHz)

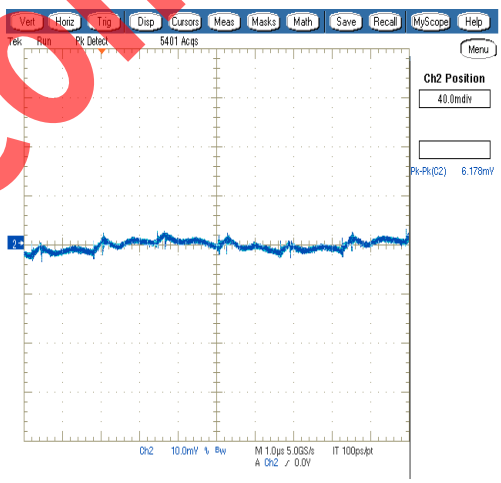

Step Load Transient Response (Vin=12V, Vout=0.7V, Cload=4800uF, Iout=15A to 45A) Trace 2=Vout, 50 mV/div, Trace 4=Iout, 20A/div.

Step Load Transient Response (Vin=12V, Vout=0.7V, Cload=4800uF, Iout=45A to 15A) Trace 2=Vout, 50 mV/div, Trace 4=Iout, 20A/div.

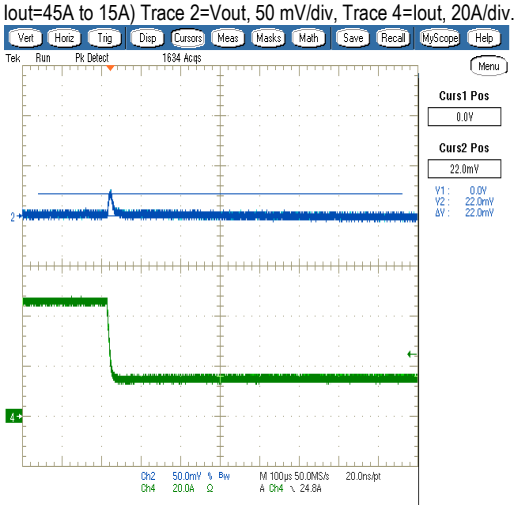

PERFORMANCE DATA AND OSCILLOGRAMS

Efficiency vs. Line Voltage and Load Current @ +25°C. (Vout = 1.2V)

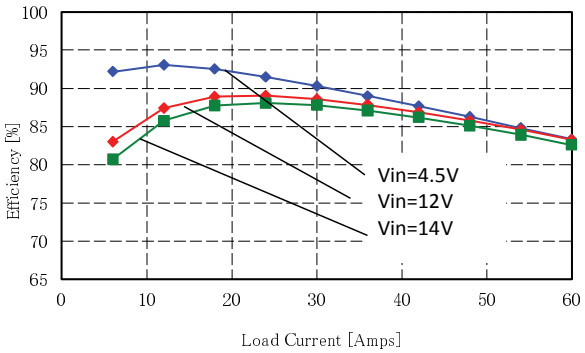

Maximum Current Temperature Derating at Sea Level (Vin=12V, Vout=1.2V)

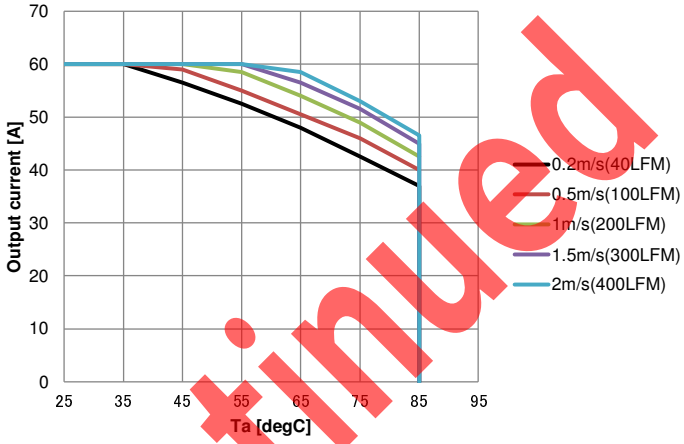

On/Off Enable Delay (Vin=12V, Vout=1.2V, Iout=60A, Cload=4800uF)
Trace1=Enable, Trace2=Vout

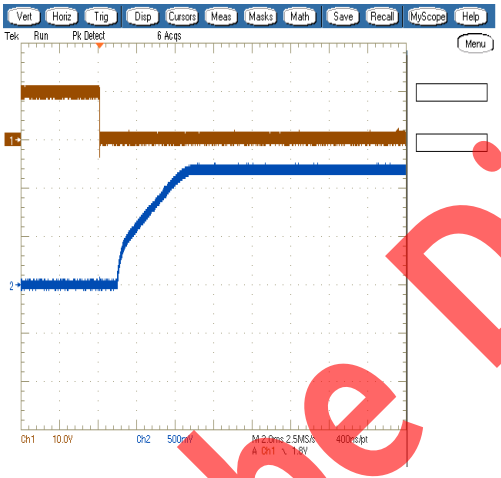

Output Ripple and Noise
(Vin=12V, Vout=1.2V, Iout=60A, Cload=4800uF, ScopeBW=20MHz)

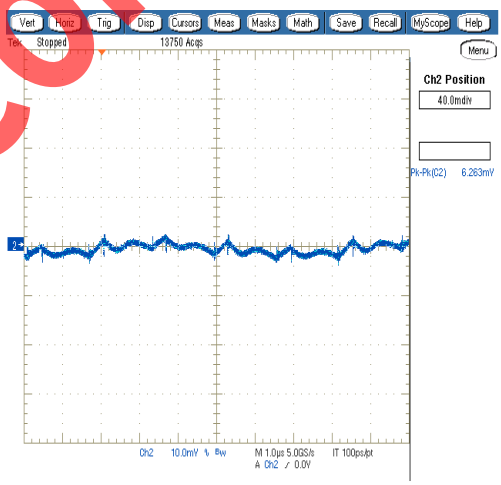

Step Load Transient Response (Vin=12V, Vout=1.2V, Cload=4800uF, Iout=15A to 45A) Trace 2=Vout, 50 mV/div, Trace 4=Iout, 20A/div.

Step Load Transient Response (Vin=12V, Vout=1.2V, Cload=4800uF, Iout=45A to 15A) Trace 2=Vout, 50 mV/div, Trace 4=Iout, 20A/div.

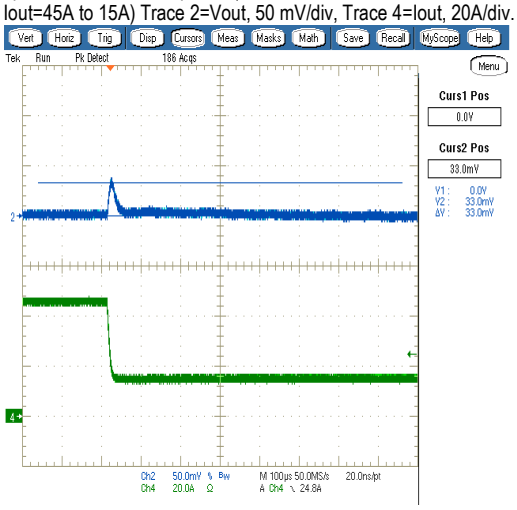

PERFORMANCE DATA AND OSCILLOGRAMS

Efficiency vs. Line Voltage and Load Current @ +25°C. (Vout = 2.0V)

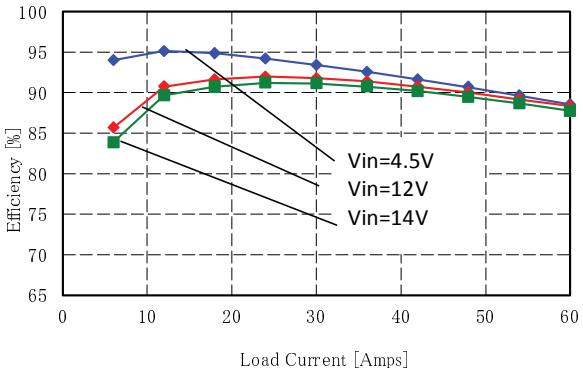

Maximum Current Temperature Derating at Sea Level (Vin=12V, Vout=2.0V)

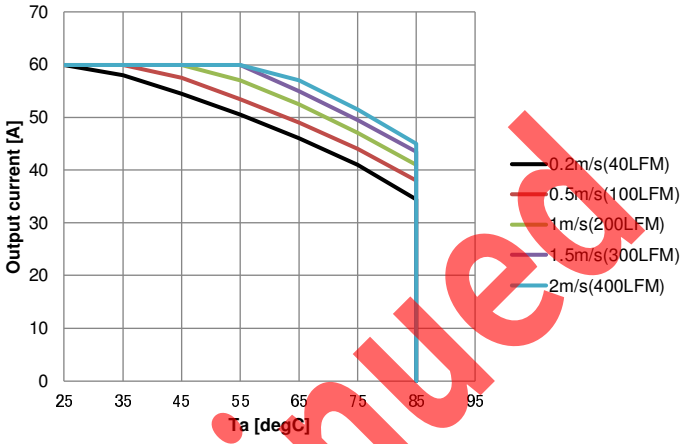

On/Off Enable Delay (Vin=12V, Vout=2.0V, Iout=60A, Cload=4800uF)
Trace1=Enable, Trace2=Vout

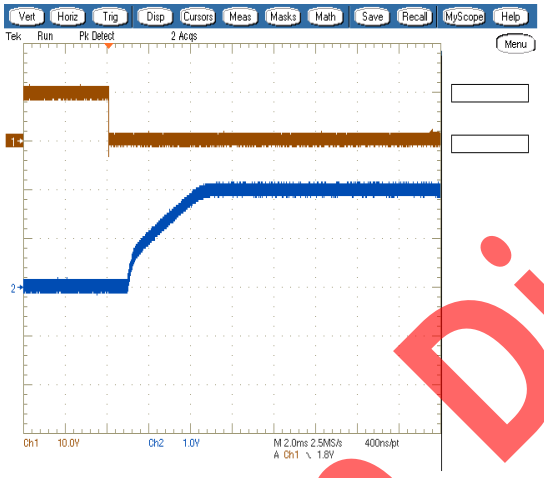

Output Ripple and Noise
(Vin=12V, Vout=2.0V, Iout=60A, Cload=4800uF, ScopeBW=20MHz)

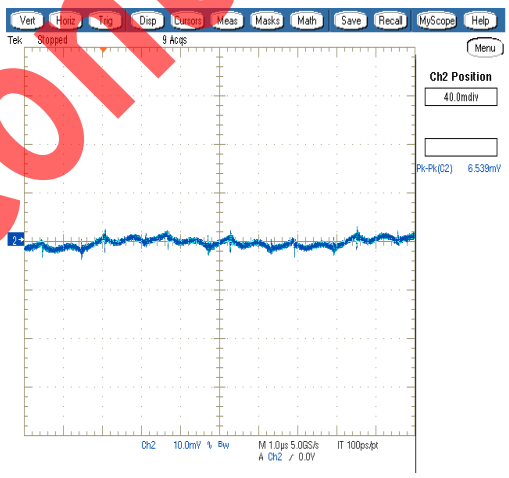

Step Load Transient Response (Vin=12V, Vout=2.0V, Cload=4800uF, Iout=15A to 45A) Trace 2=Vout, 50 mV/div, Trace 4=Iout, 20A/div.

Step Load Transient Response (Vin=12V, Vout=2.0V, Cload=4800uF, Iout=45A to 15A) Trace 2=Vout, 50 mV/div, Trace 4=Iout, 20A/div.

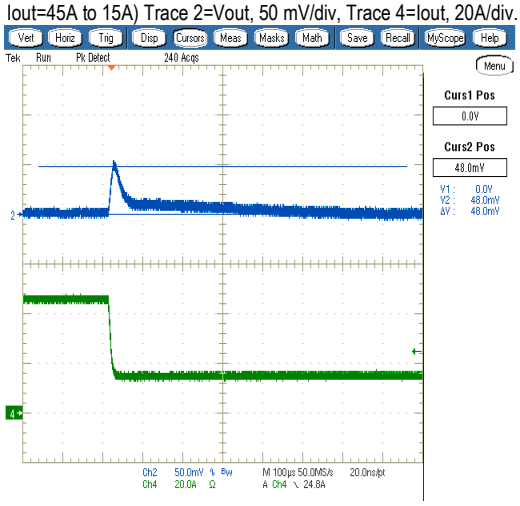

MECHANICAL SPECIFICATIONS

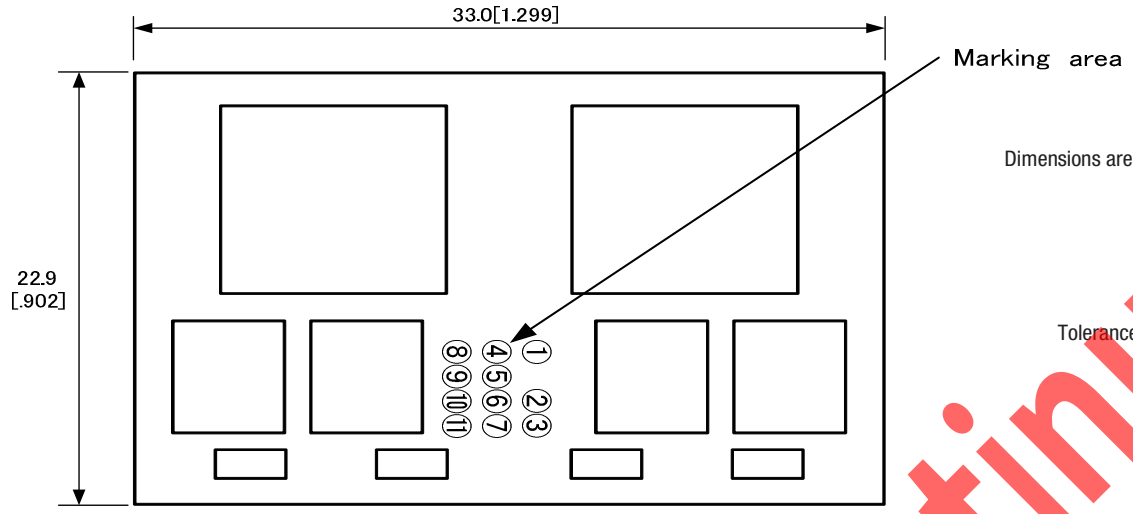

Dimensions are in mm [inches] shown for ref. only.

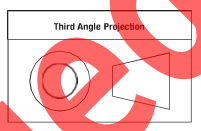

Tolerances (unless otherwise specified):
.XX ± 0.5 [0.02]
.XXX ± 0.25 [0.010]
Angles ± 2°

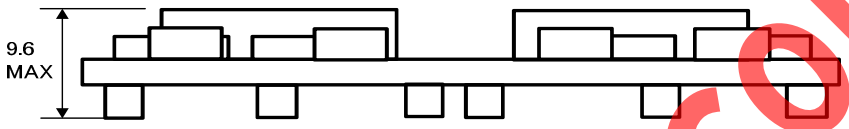

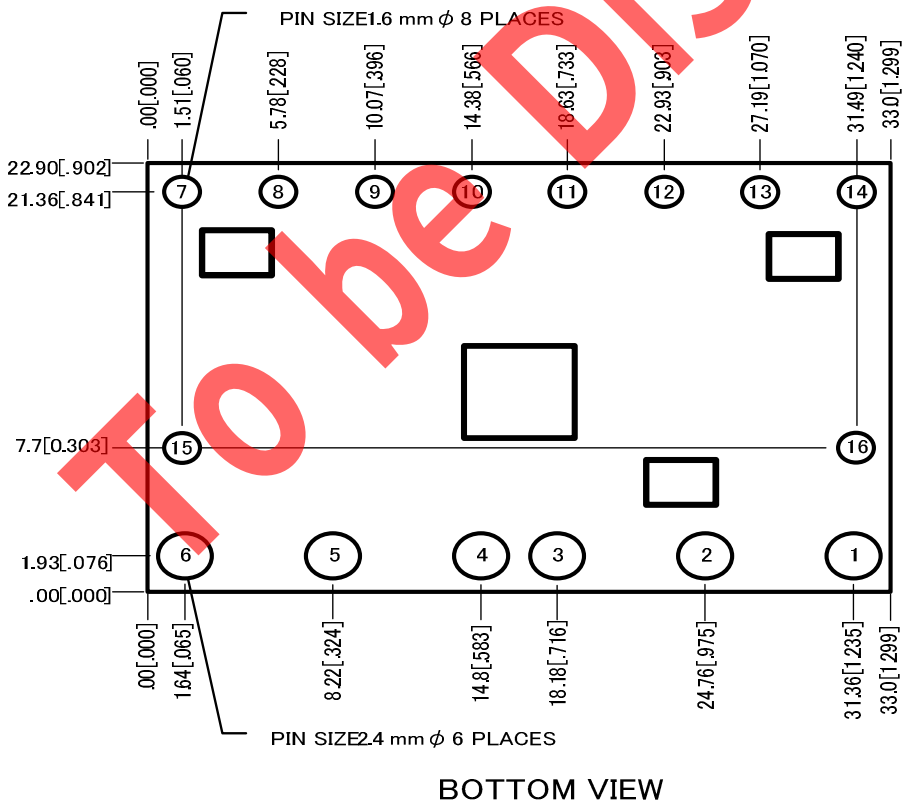

INPUT/OUTPUT CONNECTIONS	
Pin	Function
1	Vin
2	GND
3	Vout
4	Vout
5	GND
6	Vin
7	SEQ
8	PGOOD
9	ON/OFF
10	VS-
11	VS+
12	+Trim
13	-Trim
14	SHARE
15	CLKOUT*
16	SYNC*

* CLKOUT and SYNC pins are optional (include A suffix). Please see the Part Number Structure on Page 2.

RECOMMENDED FOOTPRINT INFORMATION

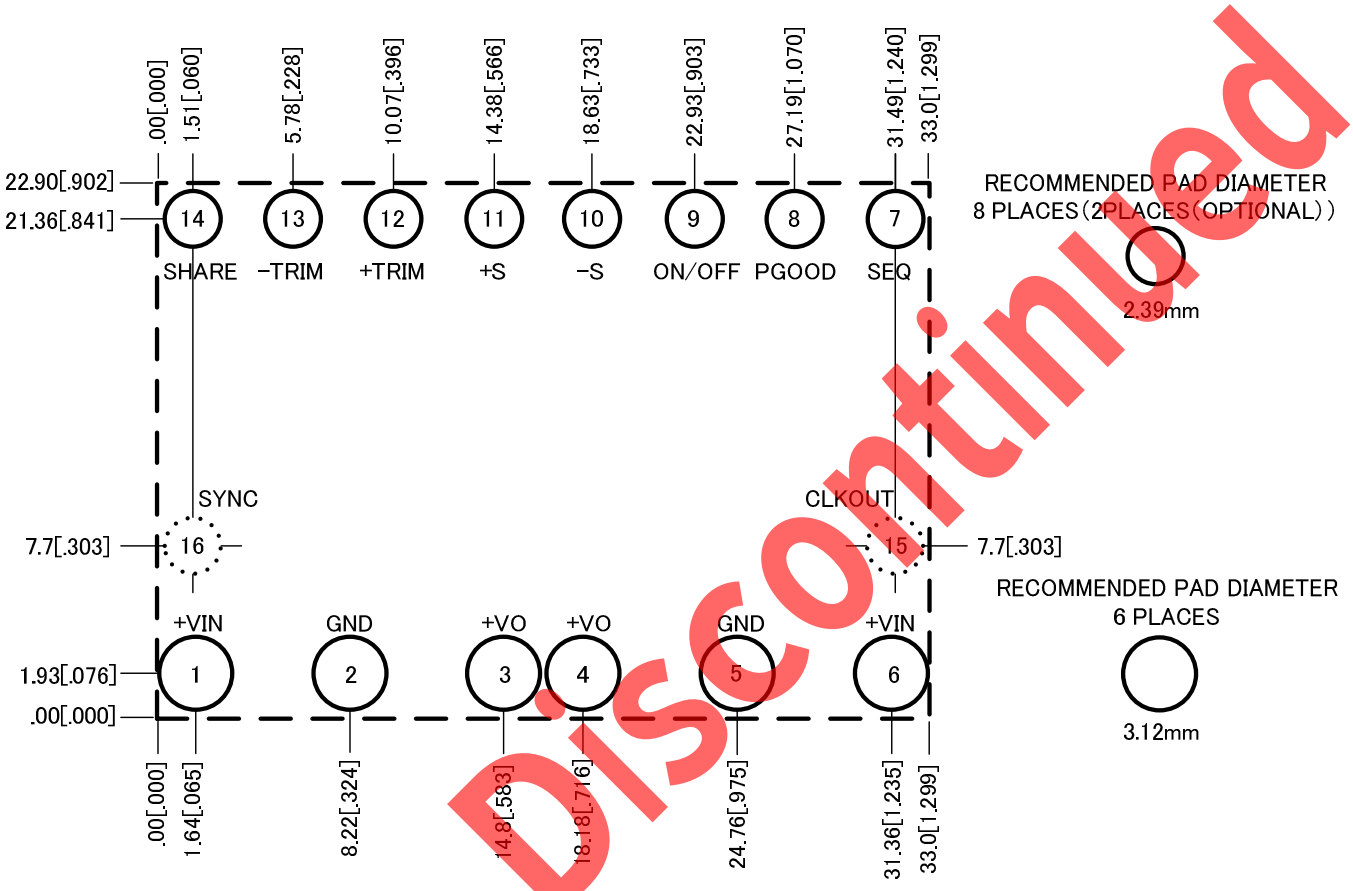

RECOMMENDED FOOTPRINT
-THRU THE BOARD-

TAPE AND REEL INFORMATION

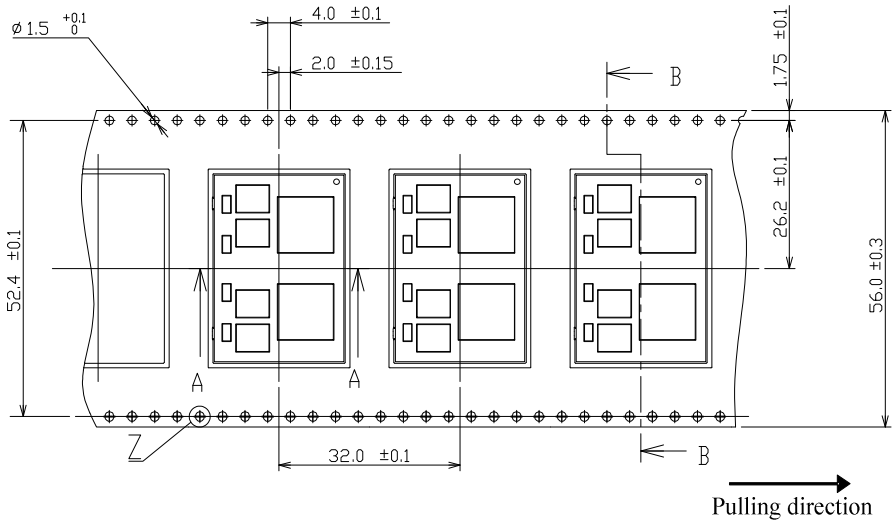

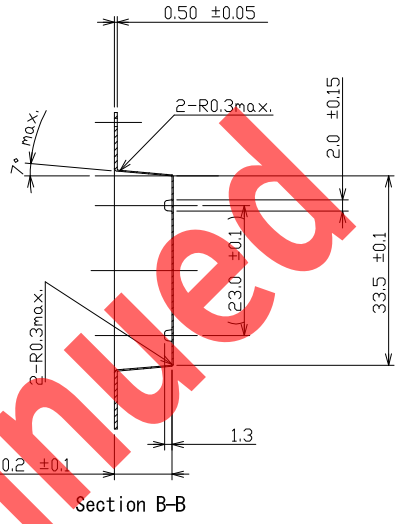

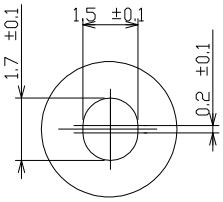

Detail Z

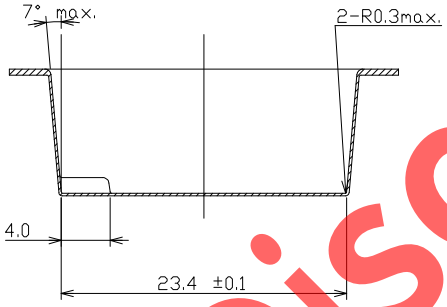

Section A-A

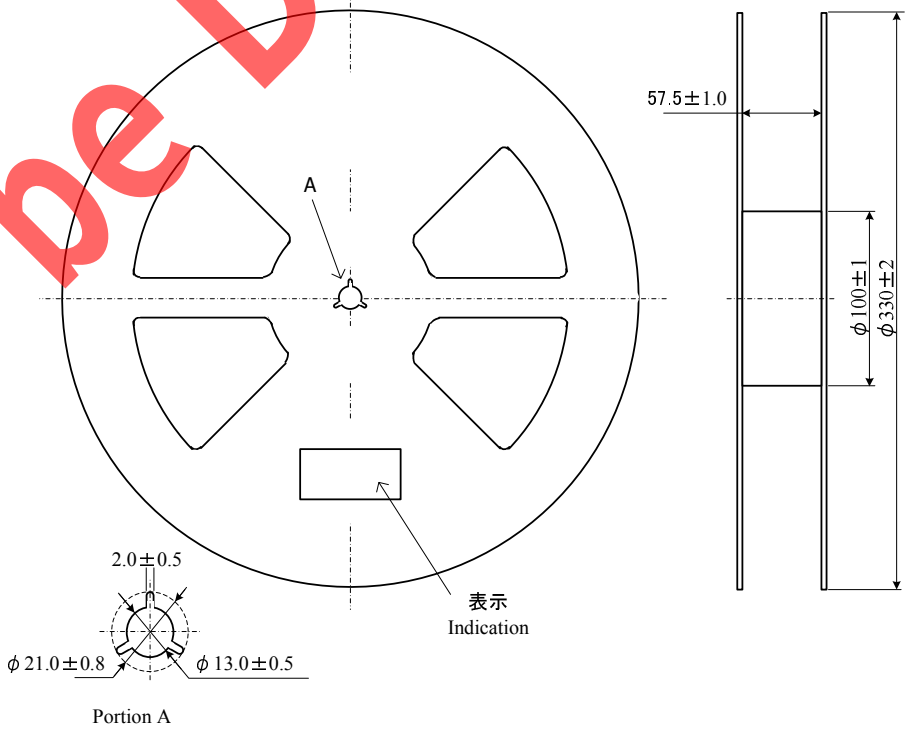

TAPE SPECIFICATIONS

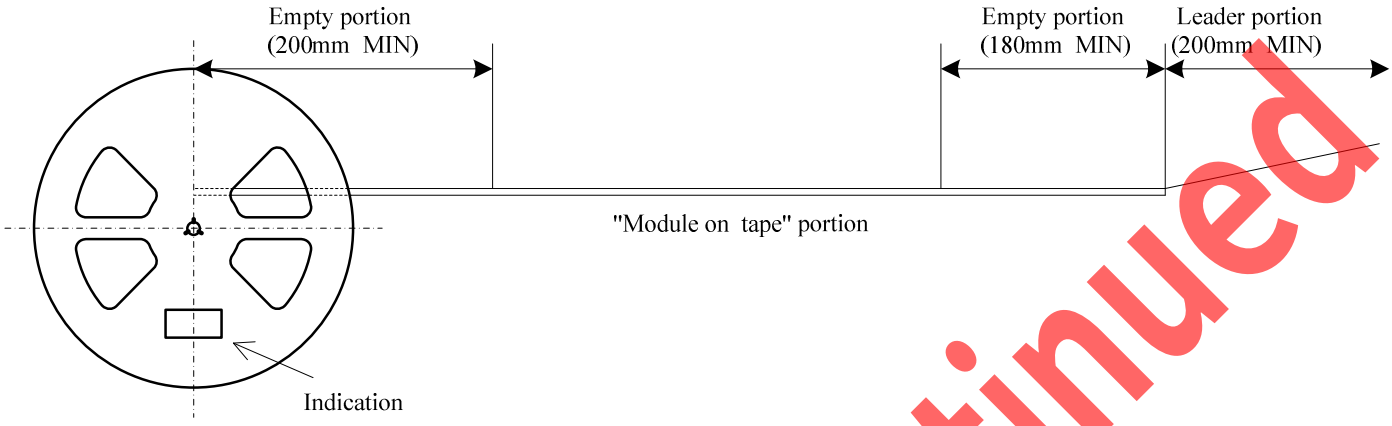

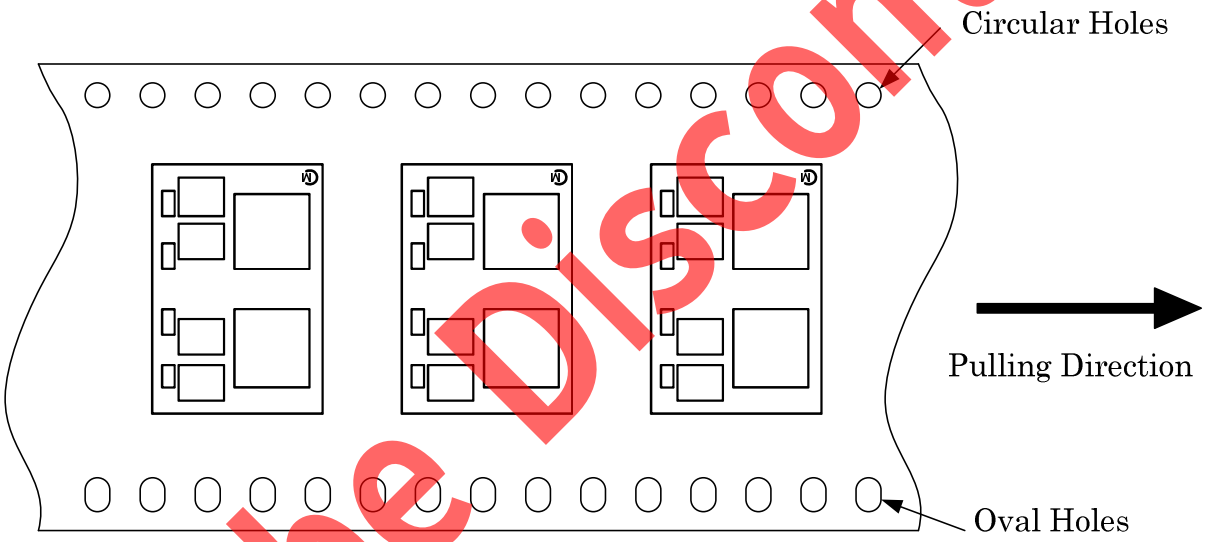

The modules are located so that the inductors are on the top side and terminals are on the bottom side.

NOTES:

1. The adhesive strength of the protective tape must be within 0.1-1.3N.
2. Each reel contains 150 pcs.
3. Each reel set in moisture-proof packaging because of MSL 3.
4. No vacant pocket in "Module on tape" section.
5. The reel is labeled with Murata part number and quantity.
6. The color of reel is not specified.

TECHNICAL NOTES

Input Fusing

Certain applications and/or safety agencies may require fuses at the inputs of power conversion components. Fuses should also be used when there is the possibility of sustained input voltage reversal which is not current limited. For greatest safety, we recommend a fast blow fuse installed in the ungrounded input supply line.

The installer must observe all relevant safety standards and regulations. For safety agency approvals, install the converter in compliance with the end-user safety standard.

Input Under-Voltage Shutdown and Start-Up Threshold

Under normal start-up conditions, converters will not begin to regulate properly until the ramping-up input voltage exceeds and remains at the Start-Up Threshold Voltage (see Specifications). Once operating, converters will not turn off until the input voltage drops below the Under-Voltage Shutdown Limit. Subsequent restart will not occur until the input voltage rises again above the Start-Up Threshold. This built-in hysteresis prevents any unstable on/off operation at a single input voltage.

Users should be aware however of input sources near the Under-Voltage Shutdown whose voltage decays as input current is consumed (such as capacitor inputs), the converter shuts off and then restarts as the external capacitor recharges. Such situations could oscillate. To prevent this, make sure the operating input voltage is well above the UV Shutdown voltage AT ALL TIMES.

Start-Up Time

Assuming that the output current is set at the rated maximum, the Vin to Vout Start-Up Time (see Specifications) is the time interval between the point when the ramping input voltage crosses the Start-Up Threshold and the fully loaded regulated output voltage enters and remains within its specified accuracy band. Actual measured times will vary with input source impedance, external input capacitance, input voltage slew rate and final value of the input voltage as it appears at the converter.

These converters include a soft start circuit to moderate the duty cycle of its PWM controller at power up, thereby limiting the input inrush current.

The On/Off Remote Control interval from On command to Vout regulated assumes that the converter already has its input voltage stabilized above the Start-Up Threshold before the On command. The interval is measured from the On command until the output enters and remains within its specified accuracy band. The specification assumes that the output is fully loaded at maximum rated current. Similar conditions apply to the On to Vout regulated specification such as external load capacitance and soft start circuitry.

Recommended Input Filtering

The user must assure that the input source has low AC impedance to provide dynamic stability and that the input supply has little or no inductive content, including long distributed wiring to a remote power supply. The converter will operate with no additional external capacitance if these conditions are met.

For best performance, we recommend installing a low-ESR capacitor immediately adjacent to the converter's input terminals. The capacitor should be a ceramic type such as the Murata GRM32 series and a electrolytic type such as Panasonic OS-CON series. Initial suggested capacitor values are 22 uF*3 ceramic type and 560uF*1 electrolytic type, rated at twice the expected maximum input voltage. Make sure that the input terminals do not go below the under voltage shutdown voltage at all times. More input bulk capacitance may be added in parallel (either electrolytic or tantalum) if needed.

Recommended Output Filtering

The converter will achieve its rated output ripple and noise with additional external capacitor. The user may install more external output capacitance to reduce the ripple even further or for improved dynamic response. Again, use low-ESR ceramic (Murata GRM32 series) and tantalum capacitors such as Panasonic POSCAP. Initial values of 100 uF*1 ceramic type and 470uF*10 tantalum type may be tried, either single or multiple capacitors in parallel. Mount these close to the converter. Measure the output ripple under your load conditions.

Use only as much capacitance as required to achieve your ripple and noise objectives. Excessive capacitance can make step load recovery sluggish or possibly introduce instability. Do not exceed the maximum rated output capacitance listed in the specifications.

Input Ripple Current and Output Noise

All models in this converter series are tested and specified for input reflected ripple current and output noise using designated external input/output components, circuits and layout as shown in the figures below.

In the figure below, the two copper strips simulate real-world printed circuit impedances between the power supply and its load. In order to minimize circuit errors and standardize tests between units, scope measurements should be made using BNC connectors or the probe ground should not exceed one half inch and soldered directly to the test circuit.

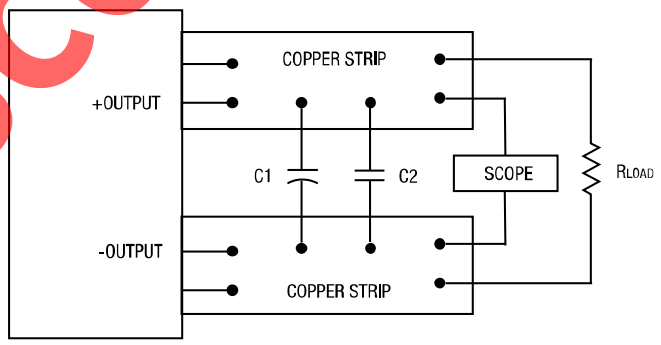

C1 = 100µF CERAMIC
C2 = 470µF x 10 TANTALUM
LOAD 2-3 INCHES (51-76mm) FROM MODULE

Measuring Output Ripple and Noise (PARD)

Minimum Output Loading Requirements

All models regulate within specification and are stable under no load to full load conditions. Operation under no load might however slightly increase output ripple and noise.

Thermal Shutdown

To prevent many over temperature problems and damage, these converters include thermal shutdown circuitry. If environmental conditions cause the temperature of the DC/DC's to rise above the Operating Temperature Range

up to the shutdown temperature, an on-board electronic temperature sensor will power down the unit. When the temperature decreases below the turn-on threshold, the converter will automatically restart.

CAUTION: If you operate too close to the thermal limits, the converter may shut down suddenly without warning. Be sure to thoroughly you're your application to avoid unplanned thermal shutdown.

Temperature Derating Curves

The graphs in this data sheet illustrate typical operation under a variety of conditions. The derating curves show the maximum continuous ambient air temperature and decreasing maximum output current which is acceptable under increasing forced airflow measured in Linear Feet per Minute ("LFM"). Note that these are AVERAGE measurements. The converter will accept brief increases in current or reduced airflow as long as the average is not exceeded.

Note that the temperatures are of the ambient airflow, not the converter itself which is obviously running at higher temperature than the outside air. Also note that very low flow rates (below about 25 LFM) are similar to "natural convection," that is, not using fan-forced airflow. Murata makes Characterization measurements in a closed cycle wind tunnel with calibrated airflow. We use both thermocouples and an infrared camera system to observe thermal performance.

CAUTION: These graphs are all collected at slightly above Sea Level altitude. Be sure to reduce the derating for higher density altitude.

Output Current Limiting

Current limiting inception is defined as the point at which full power falls below the rated tolerance. See the Performance/Functional Specifications. Note particularly that the output current may briefly rise above its rated value in normal operation as long as the average output power is not exceeded. This enhances reliability and continued operation of your application. If the output current is too high, the converter will enter the short circuit condition.

Output Short Circuit Condition

When a converter is in current-limit mode, the output voltage will drop as the output current demand increases. If the output voltage drops too low (approximately 98% of nominal output voltage for most models), the magnetically coupled voltage used to develop primary side voltages will also drop, thereby shutting down the PWM controller. Following a time-out period, the PWM will restart, causing the output voltage to begin ramping up to its appropriate value. If the short-circuit condition persists, another shutdown cycle will initiate. This rapid on/off cycling is called "hiccup mode". The hiccup cycling reduces the average output current, thereby preventing excessive internal temperatures and/or component damage. A short circuit can be tolerated indefinitely.

The "hiccup" system differs from older latching short circuit systems because you do not have to power down the converter to make it restart. The system will automatically restore operation as soon as the short circuit condition is removed.

Output Over Voltage Protection

OV protection is active upon converter (ON).An OV condition (>120%*Voset) would latch off permanently. The ON/OFF pin and PGOOD pin are also latched low at this OV event. The latch condition can be reset only by recycling Vin.

There is another non-latch OV protection (>113%*Voset). At the condition the output over 113% OV, the converter will operate "sink" mode only until the output drops below 87%*Voset. After the output drops below 87%, the converter will operate "sink-source" mode (normal operation) again.

Output Under Voltage Protection

The under voltage protection is NOT enabled until the end of soft-start condition. In a UV event, if the output drops below 87%*Voset due to some reason for example OV, OC, OT and dynamic load response, the converter will operate almost "source" mode only until UV condition is removed. (The converter could operate sink mode in a very short time of switching cycles, to avoid high negative voltage ringing until the UV condition removed.)

Output Voltage Sequencing

The OKY2 modules include a sequencing feature that enables users to implement various types of output voltage sequencing in their applications. This is accomplished via an additional sequencing pin. When not using the sequencing feature, either tie the sequence pin to Vin or leave it unconnected. When an analog voltage is applied to the sequence pin, the output voltage tracks this voltage until the output reaches the set-point voltage. The final value of the sequence voltage must be set higher than the setpoint voltage of the module. The output voltage follows the voltage on the sequence pin on a one-to-one volt basis. By connecting multiple modules together, multiple modules can track their output voltages to the voltage applied on the sequence pin. For proper voltage sequencing, first, input voltage is applied to the module. The On/Off pin of the module is left unconnected (or tied to GND for negative logic modules or tied to Vin for positive logic modules) so that the module is ON by default. After applying input voltage to the module, a minimum 10msec delay is required before applying voltage on the sequence pin. During this time, a voltage of 100mV (± 20 mV) is maintained on the sequence pin. This delay gives the module enough time to complete its internal power-up soft-start cycle. During the delay time, the sequence pin should be held close to ground (nominally 100mV ± 20 mV). This is required to keep the internal op-amp out of saturation thus preventing output overshoot during the start of the sequencing ramp.

Remote On/Off Control

The remote On/Off Control can be ordered with either polarity. Please refer to the Connection Diagram on page 1 for On/Off connections.

Positive logic models are enabled when the On/Off pin is left open or is pulled high to +Vin with respect to -Vin. An internal bias current causes the open pin to rise to +Vin. Positive-polarity devices are disabled when the On/Off is grounded or brought to within a low voltage (see Specifications) with respect to -Vin.

Negative logic devices are on (enabled) when the On/Off is open or brought to within a low voltage (see Specifications) with respect to -Vin. The device is off (disabled) when the On/Off is pulled high with respect to -Vin (see specifications).

Dynamic control of the On/Off function should be able to sink appropriate signal current when brought low and withstand appropriate voltage when brought high. Be aware too that there is a finite time in milliseconds (see Specifications) between the time of On/Off Control activation and stable, regulated output. This time will vary slightly with output load type and current and input conditions.

Output Capacitive Load

These converters do not require external capacitance added to achieve rated specifications. Users should only consider adding capacitance to reduce switching noise and/or to handle spike current load steps. Install only enough capacitance to achieve noise objectives. Excess external capacitance may cause regulation problems, degraded transient response and possible oscillation or instability.

Synchronization (OKY2-T/60-W12NA-C & OKY2-T/60-W12PA-C only)

These converters can be synchronized using an external signal. Details of the SYNC signal are provided in the Performance and Functional Specifi cations table. If the synchronization function is not being used, leave the SYNC pin floating. When synchronization function is used, output ripple may increase on some operating conditions. Please check the proper operation of this device with the peripheral circuits on your system.

CLKOUT (OKY2-T/60-W12NA-C & OKY2-T/60-W12PA-C only)

Square wave with switching frequency is appeared CLKOUT pin. It is possible to synchronize other converters by connecting CLKOUT pin to SYNC pin of other converter. Details of the CLKOUT signal are provided in the Performance and Functional Specifications table. If the CLKOUT function is not being used, leave the CLKOUT pin floating.

Soldering Guidelines

Murata recommends the specifications below when installing these converters. These specifications vary depending on the solder type. Exceeding these specifications may cause damage to the product. Your production environment may differ therefore please thoroughly review these guidelines with your process engineers.

Reflow Solder Operations for surface-mount products (SMT)	
For Sn/Ag/Cu based solders:	
Preheat Temperature	Less than 1°C per second
Time over Liquidus	45 to 75 seconds
Maximum Peak Temperature	260°C
Cooling Rate	Less than 3°C per second
For Sn/Pb based solders:	
Preheat Temperature	Less than 1°C per second
Time over Liquidus	60 to 75 seconds
Maximum Peak Temperature	235°C
Cooling Rate	Less than 3°C per second

Recommended Lead-free Solder Reflow Profile

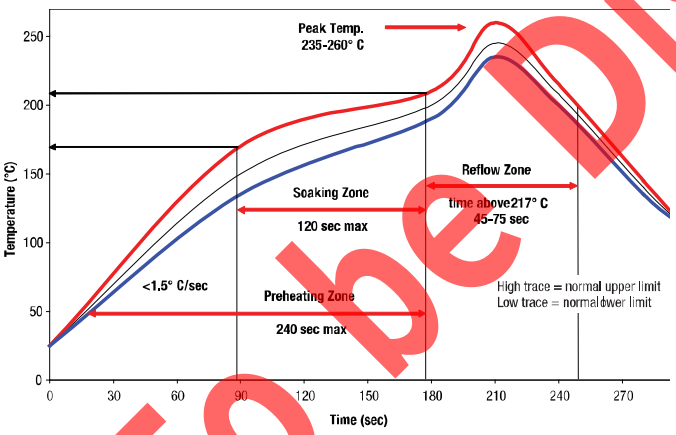

Output Voltage Adjustment

The output voltage may be adjusted over a limited range by connecting an external trim resistor (Rtrim) between the +Trim pin and –Trim pin. The Rtrim resistor must be a 1/10 Watt precision metal film type, ±0.5% accuracy or better with low temperature coefficient, ±100 ppm/°C. or better. Mount the resistor close to the converter with very short leads or use a surface mount trim resistor.

In the table below, the calculated resistance is given. Do not exceed the specified limits of the output voltage or the converter's maximum power rating when applying these resistors. Also, avoid high noise at the -Trim input. However, to prevent instability, you should never connect any capacitors to –Trim pin.

Output Voltage	Calculated Rtrim (kΩ)
2.0 V	10.80
1.8 V	12.70
1.5 V	17.50
1.2 V	28.00
1.0 V	46.60
0.70 V	(open)

Resistor Trim Equation, OKY2-T/60-W12 models

$$R_{TRIM}\ (k\Omega) = \frac{14}{Vout - 0.7}$$

PARALLEL OPERATION

NOTES:

- **The OKY2-T/60-W12N-C and OKY2-T/60-W12P-C can operate in parallel (up to 2 converters) without the SYNC function, by connecting each ISHARE, SEQ and ON/OFF terminals.**
- **The OKY2-T/60-W12NA-C and OKY2-T/60-W12PA-C can operate in parallel (up to 2 converters) with the SYNC function, by connecting each ISHARE, SEQ, ON/OFF, SYNC and CLKOUT terminals.**

(1) When using parallel operation, the temperature of some parts may increase in one of the products because there are some differences in the operating conditions between the first and second module. For this reason, please check the temperature of the products in your application.
(2) When using parallel operation, please set no more than 80% of the sum of individual products because the current of each product may not be equal.
(3) It is necessary to install Cin and Cout for each module.
(4) To avoid OC, OV and UV protection malfunction, please set same values of Vout of each module and place each modules isometric alignment for Vin and Load. And it is recommended that the load may be started after PGOOD signal "High" because of same reason.
(5) Parallel operation can be available among same parts N.O. only.
(6) There is no redundancy function.

Below is the recommended schematic diagram for parallel operation without the SYNC function: (OKY2-T/60-W12N-C and OKY2-T/60-W12P-C only)

NOTE: Please shield well from any noise, especially SHARE, SEQ, VS+, VS- and ON/OFF lines to avoid any unexpected interference during operation.

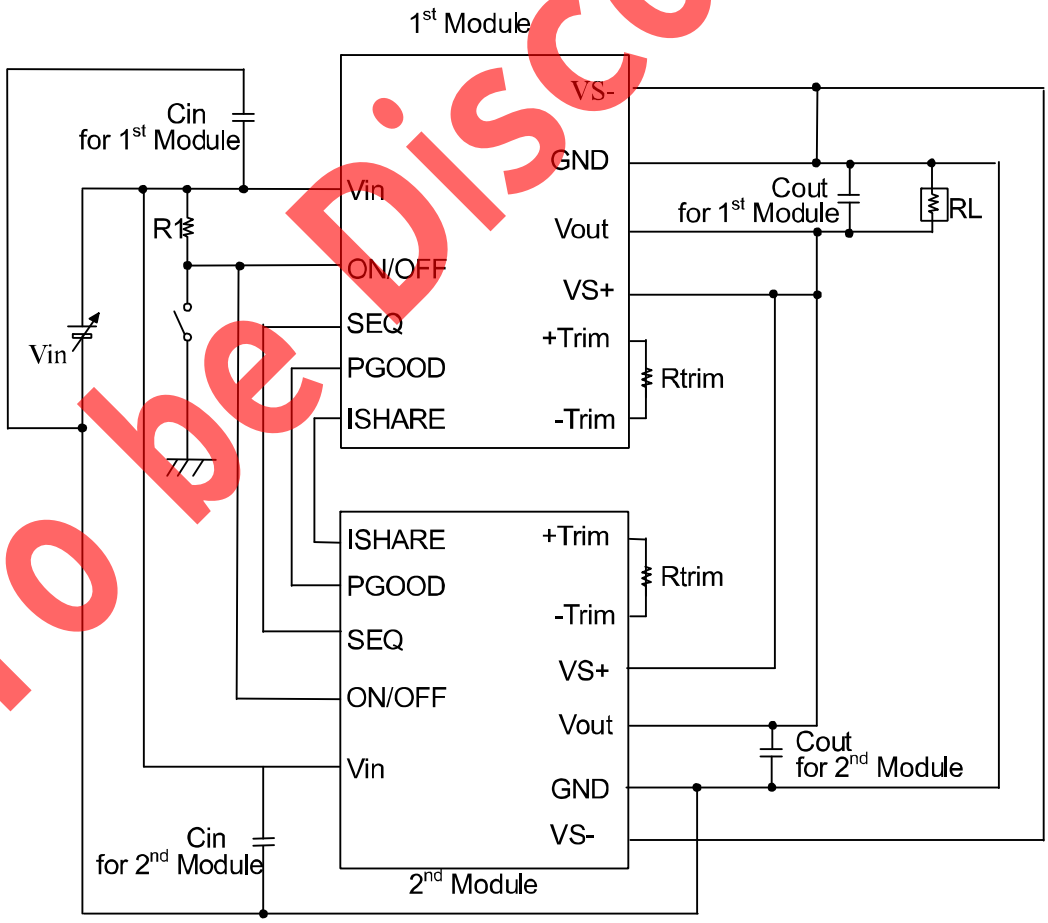

Below is the recommended schematic diagram for parallel operation with the SYNC function: (OKY2-T/60-W12NA-C and OKY2-T/60-W12PA-C only)

(1) Please shield well from any noise, especially SHARE, SEQ, VS+, VS- and ON/OFF lines, to avoid any unexpected interference during operation.
(2) Be careful for drawing of SYNC-CLKOUT line, because CLKOUT lines have large amplitude of square wave form.

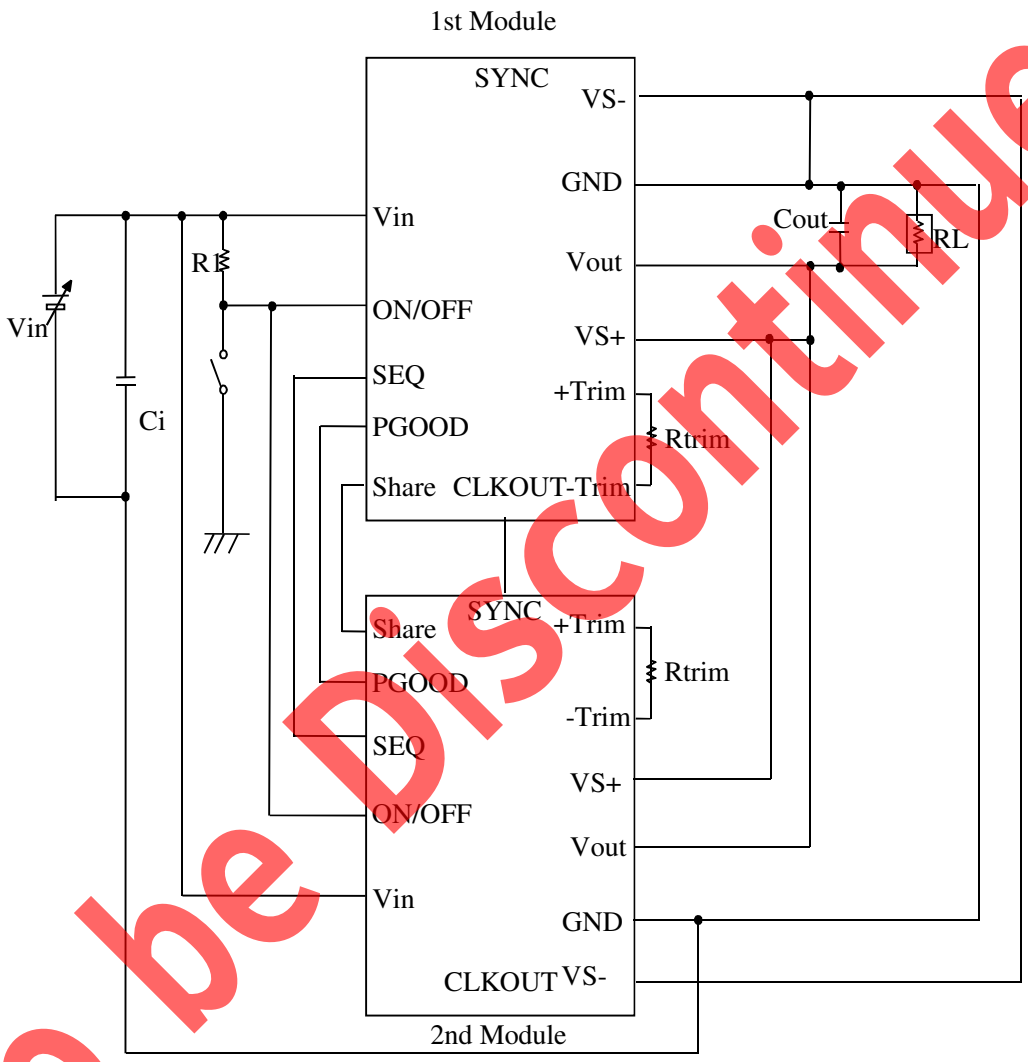

Murata Power Solutions, Inc.
11 Cabot Boulevard, Mansfield, MA 02048-1151 U.S.A.
ISO 9001 and 14001 REGISTERED

This product is subject to the following operating requirements and the Life and Safety Critical Application Sales Policy:
Refer to: http://www.murata-ps.com/requirements/