Note: This datasheet may be out of date.
Please download the latest datasheet of IML-0662N000-T1 from the official website of Murata Manufacturing Co., Ltd.

http://www.murata.com/en/products/productdetail?partno=IML-0662N000-T1

IML-0662N000-T1

Discontinued RoHS REACH

Appearance & Shape

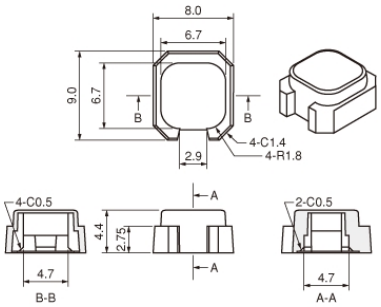

General Tolerance: ±0.2mm
Non Instructions Corner: max.R0.2
(in mm)

Packaging Information

Packaging	Specifications	Standard Packing Quantity
-	Tray	1000

Features

For SMD TYPE

Attention
1.This datasheet is downloaded from the website of Murata Manufacturing Co., Ltd. Therefore, it's specifications are subject to change or our products in it may be discontinued without advance notice. Please check with our sales representatives or product engineers before ordering.
2.This datasheet has only typical specifications because there is no space for detailed specifications.
Therefore, please review our product specifications or consult the approval sheet for product specifications before ordering.

Note: This datasheet may be out of date.
Please download the latest datasheet of IML-0662N000-T1 from the official website of Murata Manufacturing Co., Ltd.

http://www.murata.com/en/products/productdetail?partno=IML-0662N000-T1

IML-0662N000-T1

Specifications

Material	High density polyethylene
Color	Natural(White)
Operating Temperature Range	-25℃ to 60℃
Storage Temperature Range	-30℃ to 80℃

Attention
1.This datasheet is downloaded from the website of Murata Manufacturing Co., Ltd. Therefore, it's specifications are subject to change or our products in it may be discontinued without advance notice. Please check with our sales representatives or product engineers before ordering.
2.This datasheet has only typical specifications because there is no space for detailed specifications.
Therefore, please review our product specifications or consult the approval sheet for product specifications before ordering.