Note: This datasheet may be out of date.
Please download the latest datasheet of PVM4A104C01R00 from the official website of Murata Manufacturing Co., Ltd.

http://www.murata.com/en/products/productdetail?partno=PVM4A104C01R00

PVM4A104C01R00

Discontinued RoHS REACH

Appearance & Shape

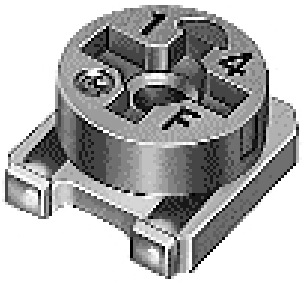

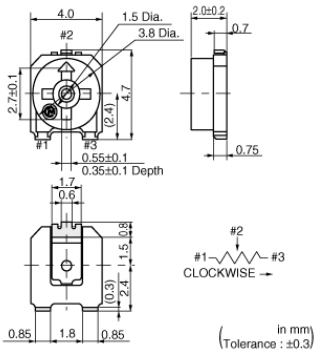

Features

1. Sealed construction protects the interior from dust and liquid, which achieves stable performance.
2. Available for flow and reflow soldering methods while maintaining unique sealed construction.
3. Simple construction of 3-piece parts achieves high reliability.
4. Large diameter slot of rotor improves driver insertion.
5. Available for cleaning after soldering.

Packaging Information

Packaging	Specifications	Standard Packing Quantity
R00	180mm Embossed Tape	500

Attention
1.This datasheet is downloaded from the website of Murata Manufacturing Co., Ltd. Therefore, it's specifications are subject to change or our products in it may be discontinued without advance notice. Please check with our sales representatives or product engineers before ordering.
2.This datasheet has only typical specifications because there is no space for detailed specifications.
Therefore, please review our product specifications or consult the approval sheet for product specifications before ordering.

Note: This datasheet may be out of date.
Please download the latest datasheet of PVM4A104C01R00 from the official website of Murata Manufacturing Co., Ltd.

http://www.murata.com/en/products/productdetail?partno=PVM4A104C01R00

PVM4A104C01R00

Specifications

Power Rating	0.1W
Shape	SMD
Maximum Working Voltage	50Vdc
Adjustment Direction	Top
Size	4mm
Auto Adjustment	Yes
Number of Turns (Effective Rotation Angle)	1(240°±10°)
Mechanical Rotation Angle	Endless
Total Resistance Value	100kΩ
Total Resistance Value Tolerance	±25%
Temperature Coefficient of Resistance	±250ppm/℃
Resistance Taper	B (Linear)
Contact Resistance Variation	3% max. of nominal total resistance value
Residual Resistance	2% max. of nominal total resistance value
Soldering Method	Reflow,Soldering Iron
Torque	2.0 to 24.5mN・m
Measure Condition of RatedPower	70℃
Operating Temperature Range	-55℃ to 125℃
Mass	0.08g

Attention
1.This datasheet is downloaded from the website of Murata Manufacturing Co., Ltd. Therefore, it's specifications are subject to change or our products in it may be discontinued without advance notice. Please check with our sales representatives or product engineers before ordering.
2.This datasheet has only typical specifications because there is no space for detailed specifications.
Therefore, please review our product specifications or consult the approval sheet for product specifications before ordering.

Note: This datasheet may be out of date.
Please download the latest datasheet of PVM4A104C01R00 from the official website of Murata Manufacturing Co., Ltd.

http://www.murata.com/en/products/productdetail?partno=PVM4A104C01R00

PVM4A104C01R00

Product Data

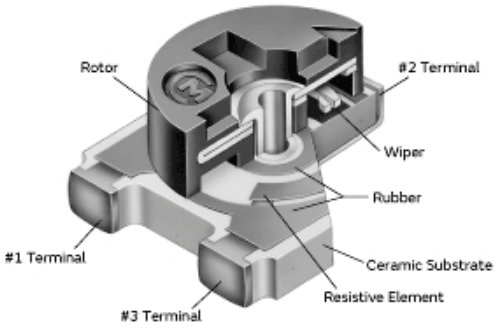

Constructions

Attention
1.This datasheet is downloaded from the website of Murata Manufacturing Co., Ltd. Therefore, it's specifications are subject to change or our products in it may be discontinued without advance notice. Please check with our sales representatives or product engineers before ordering.
2.This datasheet has only typical specifications because there is no space for detailed specifications.
Therefore, please review our product specifications or consult the approval sheet for product specifications before ordering.