Note: This datasheet may be out of date.
Please download the latest datasheet of CSTCE16M9V53-R0 from the official website of Murata Manufacturing Co., Ltd.

http://www.murata.com/en-gb/products/productdetail?partno=CSTCE16M9V53-R0

CSTCE16M9V53-R0

Discontinued RoHS REACH

Applications

Unsuitable Applications	Please be sure to read and comply with these "Precautions for use."
Specific Applications	Consumer equipment Please refer to Our Website and specifications, etc. for information about the performance, functions, quality, management, and safety required for the above applications, and use Products after confirming the performance and reliability of the actual Product.

Appearance & Shape

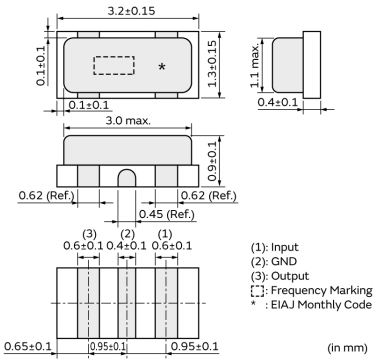

Packaging Information

Packaging	Specifications	Standard Packing Quantity
R0	180mm Embossed Tape	3000

Features

MURATA's package technology expertise has enabled the development of the Chip CERALOCK.
High-density mounting is made possible by the small package and the elimination of the need for an external load capacitor.

Features
1. Oscillation circuits do not require external load capacitors.
2. Available for a wide frequency range.
3. Extremely small and have a low profile.
4. No adjustment is necessary for oscillation circuits.

Attention
1.This datasheet is downloaded from the website of Murata Manufacturing Co., Ltd. Therefore, it's specifications are subject to change or our products in it may be discontinued without advance notice. Please check with our sales representatives or product engineers before ordering.
2.This datasheet has only typical specifications because there is no space for detailed specifications.
Therefore, please review our product specifications or consult the approval sheet for product specifications before ordering.

Note: This datasheet may be out of date.
Please download the latest datasheet of CSTCE16M9V53-R0 from the official website of Murata Manufacturing Co., Ltd.

http://www.murata.com/en-gb/products/productdetail?partno=CSTCE16M9V53-R0

CSTCE16M9V53-R0

Specifications

Product Type	Ceramic Resonator (CERALOCK)
Series	CSTCE_V
Frequency	16.934MHz
Frequency Tolerance	+/-0.50% max.
Operating Temperature Range	-20℃~80℃
Frequency Shift by Temperature	+/-0.30% max.
Frequency Aging	+/-0.20% max.
Resonant Impedance (R1)	40ohm max.
Built-in Load Capacitance (CL1/CL2)	15pF
Shape	SMD
Wash	Not available
L x W (size)	3.2x1.3mm
Mass	17mg

Attention
1.This datasheet is downloaded from the website of Murata Manufacturing Co., Ltd. Therefore, it's specifications are subject to change or our products in it may be discontinued without advance notice. Please check with our sales representatives or product engineers before ordering.
2.This datasheet has only typical specifications because there is no space for detailed specifications.
Therefore, please review our product specifications or consult the approval sheet for product specifications before ordering.