Note: This datasheet may be out of date.
Please download the latest datasheet of CSTCE10M0G15C99-R0 from the official website of Murata Manufacturing Co., Ltd.

http://www.murata.com/en/products/productdetail?partno=CSTCE10M0G15C99-R0

CSTCE10M0G15C99-R0

To be discontinued RoHS REACH

Applications

Unsuitable Applications	Please be sure to read and comply with these "Precautions for use."
Specific Applications	Automotive powertrain/safety equipment Please refer to Our Website and specifications, etc. for information about the performance, functions, quality, management, and safety required for the above applications, and use Products after confirming the performance and reliability of the actual Product.

Appearance & Shape

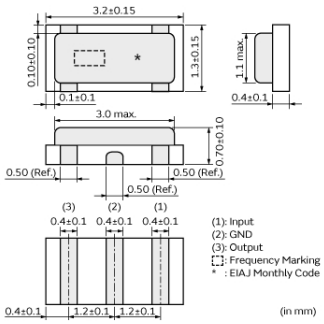

Packaging Information

Packaging	Specifications	Standard Packing Quantity
R0	180mm Embossed Tape	3000

Features

MURATA's frequency adjustment and packaging technology expertise has enabled the development of the chip CERALOCK. This diverse series owes its development to MURATA's original mass production techniques and high reliability, and has achieved importance in the worldwide automotive market.

Features
1. High accuracy resonators whose total tolerance is available for less than +-3,000ppm.
2. High reliability and available for a wide temperature range.
3. Oscillation circuits do not require external load capacitors.
4. Available for a wide frequency range.
5. Extremely small and have a low profile.
6. No adjustment is necessary for oscillation circuits.

Attention
1.This datasheet is downloaded from the website of Murata Manufacturing Co., Ltd. Therefore, it's specifications are subject to change or our products in it may be discontinued without advance notice. Please check with our sales representatives or product engineers before ordering.
2.This datasheet has only typical specifications because there is no space for detailed specifications.
Therefore, please review our product specifications or consult the approval sheet for product specifications before ordering.

Note: This datasheet may be out of date.
Please download the latest datasheet of CSTCE10M0G15C99-R0 from the official website of Murata Manufacturing Co., Ltd.

http://www.murata.com/en/products/productdetail?partno=CSTCE10M0G15C99-R0

CSTCE10M0G15C99-R0

Specifications

Product Type	Ceramic Resonator (CERALOCK)
Series	CSTCE_G_C
Frequency	10.000MHz
Frequency Tolerance	+/-0.10% max.
Operating Temperature Range	-40℃~125℃
Frequency Shift by Temperature	+/-0.13% max.
Frequency Aging	+/-0.07% max.
Resonant Impedance (R1)	40ohm max.
Built-in Load Capacitance (CL1/CL2)	33pF
Shape	SMD
Wash	available
L x W (size)	3.2x1.3mm
Mass	11mg

Attention
1.This datasheet is downloaded from the website of Murata Manufacturing Co., Ltd. Therefore, it's specifications are subject to change or our products in it may be discontinued without advance notice. Please check with our sales representatives or product engineers before ordering.
2.This datasheet has only typical specifications because there is no space for detailed specifications.
Therefore, please review our product specifications or consult the approval sheet for product specifications before ordering.