Note: This datasheet may be out of date.
Please download the latest datasheet of PTFL04BE471Q2N34B0 from the official website of Murata Manufacturing Co., Ltd.

http://www.murata.com/en/products/productdetail?partno=PTFL04BE471Q2N34B0

PTFL04BE471Q2N34B0

Discontinued RoHS REACH

Applications

Unsuitable Applications	Please be sure to read and comply with these "Precautions for use."
Specific Applications	Industrial Equipment Please refer to Our Website and specifications, etc. for information about the performance, functions, quality, management, and safety required for the above applications, and use Products after confirming the performance and reliability of the actual Product.

Appearance & Shape

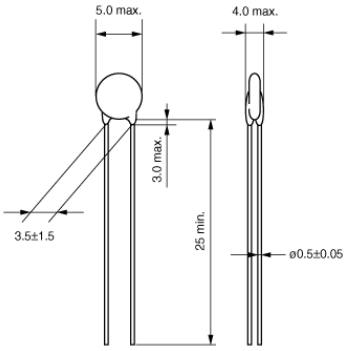

Packaging Information

Packaging	Specifications	Standard Packing Quantity
B0	Bulk(Bag)	400

Features

1. Compact and light design as well as excellent thermal response.
2. Contactless operation provides a prolonged service life, yet permits noiseless operation.
3. The operating point of "POSISTOR" is set on the steepest point along the resistance-temperature characteristic curve, thus performing the overheat protective operation securely.
4. PTFM Series and PTFL Series have same resistance-temperature characteristic, providing a selection depending on the mounting method.
5. UL/cULcertified product. (UL1434, File No. E137188)

Attention
1.This datasheet is downloaded from the website of Murata Manufacturing Co., Ltd. Therefore, it's specifications are subject to change or our products in it may be discontinued without advance notice. Please check with our sales representatives or product engineers before ordering.
2.This datasheet has only typical specifications because there is no space for detailed specifications.
Therefore, please review our product specifications or consult the approval sheet for product specifications before ordering.

Note: This datasheet may be out of date.
Please download the latest datasheet of PTFL04BE471Q2N34B0 from the official website of Murata Manufacturing Co., Ltd.

http://www.murata.com/en/products/productdetail?partno=PTFL04BE471Q2N34B0

PTFL04BE471Q2N34B0

Specifications

Max. Voltage	16V
Sensing Temperature	90℃
Measure Condition of Sensing Temperature	TS℃
Resistance (25℃)	100Ω
Resistance Value Tolerance (at 25℃)	max.
Resistance	330Ω
Measure Condition of Resistance	max.(TS-10℃)
Resistance Value(2)	470Ω
Measure Condition of Resistance(2)	min.(TS℃)
Operating Temperature Range	-10℃ to 100℃
Shape	Lead
Mass	0.30g
MSL	N

Attention
1.This datasheet is downloaded from the website of Murata Manufacturing Co., Ltd. Therefore, it's specifications are subject to change or our products in it may be discontinued without advance notice. Please check with our sales representatives or product engineers before ordering.
2.This datasheet has only typical specifications because there is no space for detailed specifications.
Therefore, please review our product specifications or consult the approval sheet for product specifications before ordering.

Note: This datasheet may be out of date.
Please download the latest datasheet of PTFL04BE471Q2N34B0 from the official website of Murata Manufacturing Co., Ltd.

http://www.murata.com/en/products/productdetail?partno=PTFL04BE471Q2N34B0

PTFL04BE471Q2N34B0

Product Data

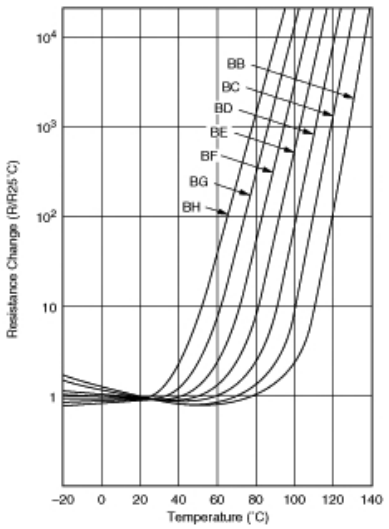

Resistance-Temperature Characteristics

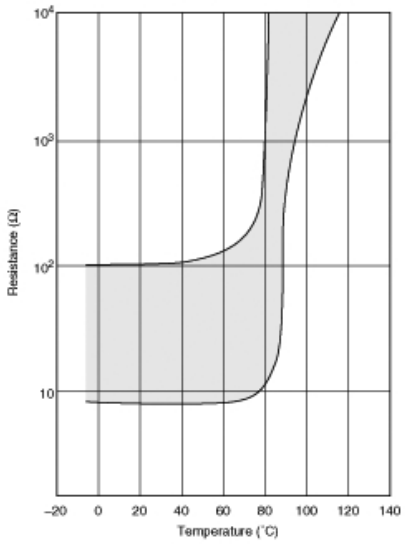

Resistance-Temperature Characteristics Range

Attention
1.This datasheet is downloaded from the website of Murata Manufacturing Co., Ltd. Therefore, it's specifications are subject to change or our products in it may be discontinued without advance notice. Please check with our sales representatives or product engineers before ordering.
2.This datasheet has only typical specifications because there is no space for detailed specifications.
Therefore, please review our product specifications or consult the approval sheet for product specifications before ordering.