Note: This datasheet may be out of date.
Please download the latest datasheet of XRCLK14M745F1QB6P0 from the official website of Murata Manufacturing Co., Ltd.

http://www.murata.com/en/products/productdetail?partno=XRCLK14M745F1QB6P0

XRCLK14M745F1QB6P0

Discontinued RoHS REACH

Applications

Unsuitable Applications	Please be sure to read and comply with these "Precautions for use."
Specific Applications	Consumer equipment Please refer to Our Website and specifications, etc. for information about the performance, functions, quality, management, and safety required for the above applications, and use Products after confirming the performance and reliability of the actual Product.

Appearance & Shape

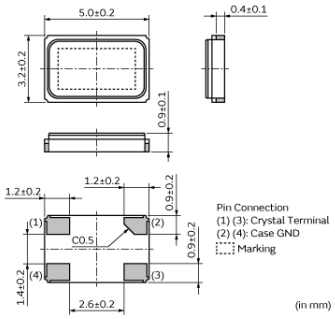

Packaging Information

Packaging	Specifications	Standard Packing Quantity
P0	255mm Plastic Tape	2000

Features

Standard package size (5032) product with seam sealing technology.
Robust package gives high reliability and high impact resistance.
They are suitable for various types of digital communication equipment requiring high reliability.

Attention
1.This datasheet is downloaded from the website of Murata Manufacturing Co., Ltd. Therefore, it's specifications are subject to change or our products in it may be discontinued without advance notice. Please check with our sales representatives or product engineers before ordering.
2.This datasheet has only typical specifications because there is no space for detailed specifications.
Therefore, please review our product specifications or consult the approval sheet for product specifications before ordering.

Note: This datasheet may be out of date.
Please download the latest datasheet of XRCLK14M745F1QB6P0 from the official website of Murata Manufacturing Co., Ltd.

http://www.murata.com/en/products/productdetail?partno=XRCLK14M745F1QB6P0

XRCLK14M745F1QB6P0

Specifications

Product Type	Crystal Unit
Series	XRCLK
Type	TSS-5032A
Frequency	14.7456MHz
Frequency Tolerance	+/-10ppm max. (25+/-3℃)
Operating Temperature Range	-30℃~85℃
Frequency Shift by Temperature	+/-15ppm max.
Frequency Aging	+/-3ppm max./year
Equivalent Series Resistance (ESR)	60ohm max.
Drive Level (DL)	30μW
Load Capacitance (Cs)	8pF
Shape	SMD
Wash	Not available
L x W (size)	5.0x3.2mm
Mass	45.83mg

Attention
1.This datasheet is downloaded from the website of Murata Manufacturing Co., Ltd. Therefore, it's specifications are subject to change or our products in it may be discontinued without advance notice. Please check with our sales representatives or product engineers before ordering.
2.This datasheet has only typical specifications because there is no space for detailed specifications.
Therefore, please review our product specifications or consult the approval sheet for product specifications before ordering.