Note: This datasheet may be out of date.
Please download the latest datasheet of PVG5H202C03B00 from the official website of Murata Manufacturing Co., Ltd.

http://www.murata.com/en-sg/products/productdetail?partno=PVG5H202C03B00

PVG5H202C03B00

Discontinued RoHS REACH

Appearance & Shape

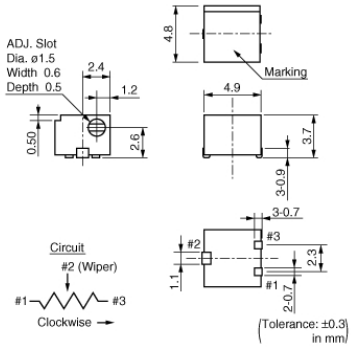

Features

1. Sealed construction protects the interior from dust and liquid, which achieves stable performance.
2. Available with reflow soldering method
3. Available for ultrasonic cleaning after soldering
4. Clutch mechanism prevents excessive wiper rotation.
5. Both Top and side adjustment directions
6. Ultra smaller volume (1/5-1/2) than leaded multi-turn potentiometer.

Packaging Information

Packaging	Specifications	Standard Packing Quantity
B00	Bulk(Bag)	100

Attention
1.This datasheet is downloaded from the website of Murata Manufacturing Co., Ltd. Therefore, it's specifications are subject to change or our products in it may be discontinued without advance notice. Please check with our sales representatives or product engineers before ordering.
2.This datasheet has only typical specifications because there is no space for detailed specifications.
Therefore, please review our product specifications or consult the approval sheet for product specifications before ordering.

Note: This datasheet may be out of date.
Please download the latest datasheet of PVG5H202C03B00 from the official website of Murata Manufacturing Co., Ltd.

http://www.murata.com/en-sg/products/productdetail?partno=PVG5H202C03B00

PVG5H202C03B00

Specifications

Power Rating	0.25W
Shape	SMD
Maximum Working Voltage	300Vdc
Adjustment Direction	Side
Size	5mm
Auto Adjustment	No
Number of Turns (Effective Rotation Angle)	11
Mechanical Rotation Angle	-
Total Resistance Value	2kΩ
Total Resistance Value Tolerance	±10%
Temperature Coefficient of Resistance	±150ppm/℃
Resistance Taper	B (Linear)
Contact Resistance Variation	Less than 3% of total resistance value or 3ohm, whichever is greater
Residual Resistance	Less than 1% of total resistance value or 2ohm, whichever is greater
Torque	17.6mN・m max.
Measure Condition of RatedPower	70℃
Operating Temperature Range	-55℃ to 125℃
Mass	0.18g

Attention
1.This datasheet is downloaded from the website of Murata Manufacturing Co., Ltd. Therefore, it's specifications are subject to change or our products in it may be discontinued without advance notice. Please check with our sales representatives or product engineers before ordering.
2.This datasheet has only typical specifications because there is no space for detailed specifications.
Therefore, please review our product specifications or consult the approval sheet for product specifications before ordering.

Note: This datasheet may be out of date.
Please download the latest datasheet of PVG5H202C03B00 from the official website of Murata Manufacturing Co., Ltd.

http://www.murata.com/en-sg/products/productdetail?partno=PVG5H202C03B00

PVG5H202C03B00

Product Data

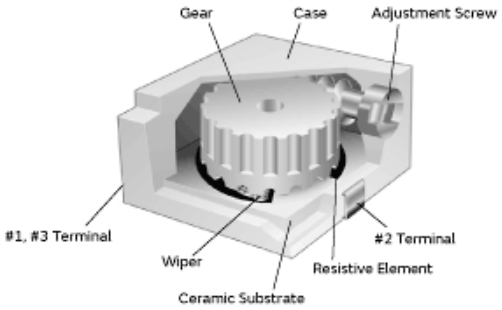

Constructions

Attention
1.This datasheet is downloaded from the website of Murata Manufacturing Co., Ltd. Therefore, it's specifications are subject to change or our products in it may be discontinued without advance notice. Please check with our sales representatives or product engineers before ordering.
2.This datasheet has only typical specifications because there is no space for detailed specifications.
Therefore, please review our product specifications or consult the approval sheet for product specifications before ordering.