Note: This datasheet may be out of date.
Please download the latest datasheet of TZV2Z060A110R00 from the official website of Murata Manufacturing Co., Ltd.

http://www.murata.com/en-sg/products/productdetail?partno=TZV2Z060A110R00

TZV2Z060A110R00

Discontinued RoHS REACH

Appearance & Shape

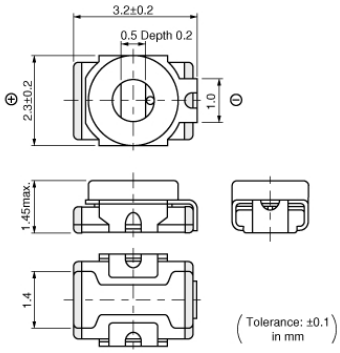

Features

1. Small size with external dimensions of 2.3(W)x3.2(L)x1.45max.(H)mm.
2. Unique construction with no plastic material provides superior soldering heat resistance to maintain excellent characteristic performance after reflow soldering.
3. Designed for automatic placement in surface mount pplications.
4. Funnel shaped metal case enables in-process automatic adjustment.

Packaging Information

Packaging	Specifications	Standard Packing Quantity
R00	180mm Embossed Tape	2000

Attention
1.This datasheet is downloaded from the website of Murata Manufacturing Co., Ltd. Therefore, it's specifications are subject to change or our products in it may be discontinued without advance notice. Please check with our sales representatives or product engineers before ordering.
2.This datasheet has only typical specifications because there is no space for detailed specifications.
Therefore, please review our product specifications or consult the approval sheet for product specifications before ordering.

Note: This datasheet may be out of date.
Please download the latest datasheet of TZV2Z060A110R00 from the official website of Murata Manufacturing Co., Ltd.

http://www.murata.com/en-sg/products/productdetail?partno=TZV2Z060A110R00

TZV2Z060A110R00

Specifications

Shape	SMD
Operating Temperature Range	-25℃ to 85℃
Thickness	1.45mm
Thickness Tolerance	max.
Rated Voltage	25Vdc
Cmin.(max.)	2.5pF
Cmax.	6pF
Cmax. Tolerance	+100/-0%
Adjustment Direction	Top
TC	NP0±300ppm/℃
Q	500min. at 1MHz, Cmax.
Withstanding Voltage	55Vdc
Insulation Resistance(min.)	10000MΩ
Torque	1.0 to 9.8mNm
Mass	0.04g

Attention
1.This datasheet is downloaded from the website of Murata Manufacturing Co., Ltd. Therefore, it's specifications are subject to change or our products in it may be discontinued without advance notice. Please check with our sales representatives or product engineers before ordering.
2.This datasheet has only typical specifications because there is no space for detailed specifications.
Therefore, please review our product specifications or consult the approval sheet for product specifications before ordering.

Note: This datasheet may be out of date.
Please download the latest datasheet of TZV2Z060A110R00 from the official website of Murata Manufacturing Co., Ltd.

http://www.murata.com/en-sg/products/productdetail?partno=TZV2Z060A110R00

TZV2Z060A110R00

Product Data

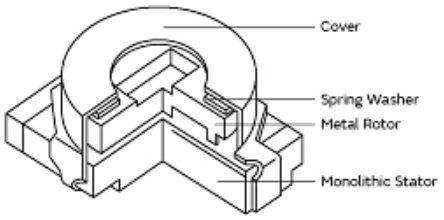

Constructions

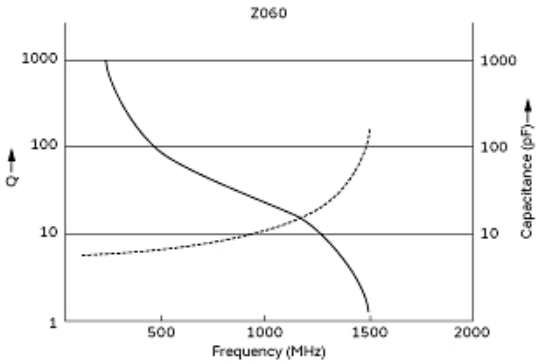

Frequency Characteristics

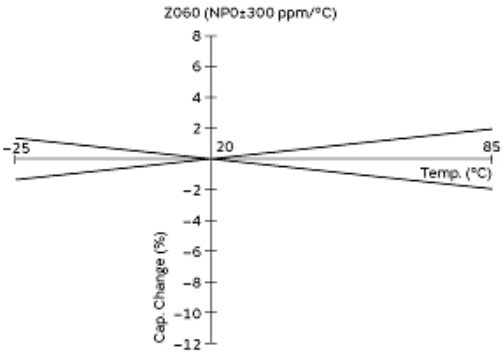

Temp. Coeff. Characteristics

Attention
1.This datasheet is downloaded from the website of Murata Manufacturing Co., Ltd. Therefore, it's specifications are subject to change or our products in it may be discontinued without advance notice. Please check with our sales representatives or product engineers before ordering.
2.This datasheet has only typical specifications because there is no space for detailed specifications.
Therefore, please review our product specifications or consult the approval sheet for product specifications before ordering.