Note: If you have not downloaded this document from our official website, please note that the information provided may not be the most current.
Please download the latest datasheet of LQG15HS39NJ02# from the official website of Murata

http://www.murata.com/en-sg/products/productdetail?partno=LQG15HS39NJ02%23

LQG15HS39NJ02#

"#"at the end indicates the package specification code.

Designed under Industrial Global Standard

In Production RoHS REACH 125 ℃max. Multi-layer Reflow OK

< List of part numbers with package codes >

LQG15HS39NJ02B LQG15HS39NJ02D LQG15HS39NJ02J

Applications

Unsuitable Applications	Please be sure to read and comply with these "Precautions for use."
Specific Applications	Consumer equipment,Medical equipment [GHTF A/B/C] except for implant & surgery & auto injector, Industrial equipment except for transportation & facility & energy equipment Please refer to Our Website and specifications, etc. for information about the performance, functions, quality, management, and safety required for the above applications, and use Products after confirming the performance and reliability of the actual Product.
Recommended Applications	Consumer equipment

Appearance & Shape

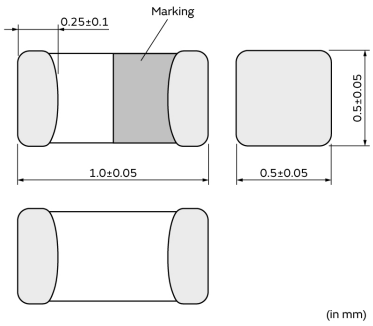

Attention
1.This datasheet is downloaded from the website of Murata Manufacturing Co., Ltd. Therefore, it's specifications are subject to change or our products in it may be discontinued without advance notice. Please check with our sales representatives or product engineers before ordering.
2.This datasheet has only typical specifications because there is no space for detailed specifications.
Therefore, please review our product specifications or consult the approval sheet for product specifications before ordering.

Note: If you have not downloaded this document from our official website, please note that the information provided may not be the most current.
Please download the latest datasheet of LQG15HS39NJ02# from the official website of Murata

http://www.murata.com/en-sg/products/productdetail?partno=LQG15HS39NJ02%23

LQG15HS39NJ02#

"#"at the end indicates the package specification code.

References

Packaging	Specifications	Standard Packing Quantity
B	Bulk(Bag)	1000
D	180mm Paper Tape	10000
J	330mm Paper Tape	50000

Mass (typ.)	
1 piece	0.001g

Attention
1.This datasheet is downloaded from the website of Murata Manufacturing Co., Ltd. Therefore, it's specifications are subject to change or our products in it may be discontinued without advance notice. Please check with our sales representatives or product engineers before ordering.
2.This datasheet has only typical specifications because there is no space for detailed specifications.
Therefore, please review our product specifications or consult the approval sheet for product specifications before ordering.

Note: If you have not downloaded this document from our official website, please note that the information provided may not be the most current.
Please download the latest datasheet of LQG15HS39NJ02# from the official website of Murata

http://www.murata.com/en-sg/products/productdetail?partno=LQG15HS39NJ02%23

LQG15HS39NJ02#

"#"at the end indicates the package specification code.

Specifications

L size	1.0±0.05mm
W size	0.5±0.05mm
T size	0.5±0.05mm
Size code inch (mm)	0402 (1005)
Inductance	39nH±5%
Inductance Test Frequency	100MHz
Rated current (Itemp) (Based on Temperature rise)	300mA
Max. of DC resistance	0.65Ω
Operating Temperature Range(Self-temperature rise is not included)	-55℃ to 125℃
Class of magnetic shield	Non-Shielded
Q(min.)	8
Q Test Frequency	100MHz
Self resonance frequency (min.)	1200MHz
Brand	Murata
Series	LQG15HS_02

Attention
1.This datasheet is downloaded from the website of Murata Manufacturing Co., Ltd. Therefore, it's specifications are subject to change or our products in it may be discontinued without advance notice. Please check with our sales representatives or product engineers before ordering.
2.This datasheet has only typical specifications because there is no space for detailed specifications.
Therefore, please review our product specifications or consult the approval sheet for product specifications before ordering.

Note: If you have not downloaded this document from our official website, please note that the information provided may not be the most current.
Please download the latest datasheet of LQG15HS39NJ02# from the official website of Murata

http://www.murata.com/en-sg/products/productdetail?partno=LQG15HS39NJ02%23

LQG15HS39NJ02#

"#"at the end indicates the package specification code.

Characteristic Data

The charts below may show another part number which shares its characteristics.

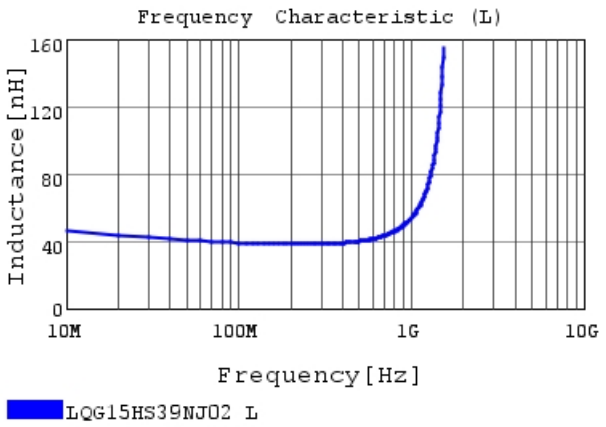

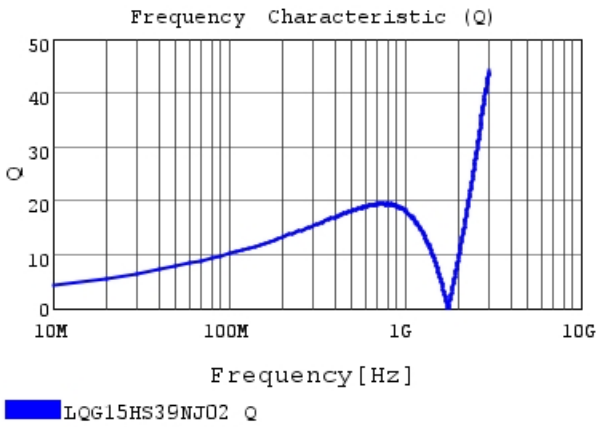

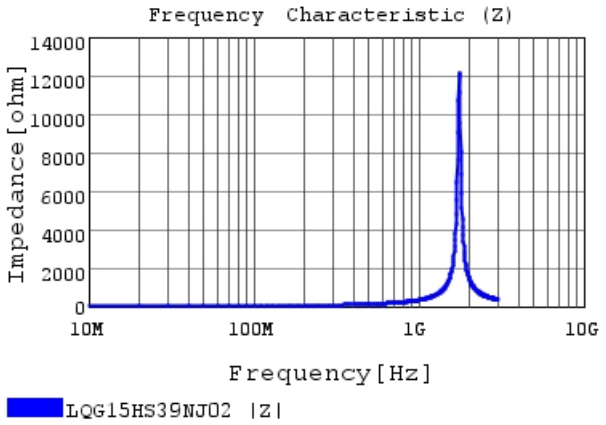

Attention
1.This datasheet is downloaded from the website of Murata Manufacturing Co., Ltd. Therefore, it's specifications are subject to change or our products in it may be discontinued without advance notice. Please check with our sales representatives or product engineers before ordering.
2.This datasheet has only typical specifications because there is no space for detailed specifications.
Therefore, please review our product specifications or consult the approval sheet for product specifications before ordering.