Note: This datasheet may be out of date.
Please download the latest datasheet of TZR1Z040A001R00 from the official website of Murata Manufacturing Co., Ltd.

http://www.murata.com/en-us/products/productdetail?partno=TZR1Z040A001R00

TZR1Z040A001R00

Discontinued RoHS REACH

Appearance & Shape

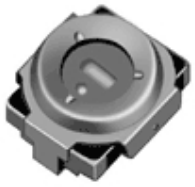

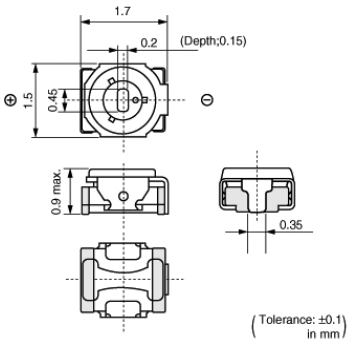

Features

1. Ultra-small and thin with external dimensions of 1.5(W)x1.7(L)x0.85(H)mm
   (80% less in volume than the current product).
2. Unique construction with no plastic material provides superior soldering heat
   resistance to maintain excellent characteristic performance after reflow ldering.
3. Suitable for high frequency circuit due to high self-resonant frequency
   (6.2GHz of TZR1Z010 at 1.0pF setting).

Packaging Information

Packaging	Specifications	Standard Packing Quantity
R00	180mm Embossed Tape	3000

Attention
1.This datasheet is downloaded from the website of Murata Manufacturing Co., Ltd. Therefore, it's specifications are subject to change or our products in it may be discontinued without advance notice. Please check with our sales representatives or product engineers before ordering.
2.This datasheet has only typical specifications because there is no space for detailed specifications.
Therefore, please review our product specifications or consult the approval sheet for product specifications before ordering.

Note: This datasheet may be out of date.
Please download the latest datasheet of TZR1Z040A001R00 from the official website of Murata Manufacturing Co., Ltd.

http://www.murata.com/en-us/products/productdetail?partno=TZR1Z040A001R00

TZR1Z040A001R00

Specifications

Shape	SMD
Operating Temperature Range	-25℃ to 85℃
Thickness	0.85mm
Thickness Tolerance	±0.05
Rated Voltage	25Vdc
Cmin.(max.)	1.5pF
Cmax.	4pF
Cmax. Tolerance	+100/-0%
Adjustment Direction	Top
TC	NP0±500ppm/℃
Q	300min. at 1MHz, Cmax.
Withstanding Voltage	55Vdc
Insulation Resistance(min.)	10000MΩ
Torque	0.1 to 1.0mNm
Mass	0.009g

Attention
1.This datasheet is downloaded from the website of Murata Manufacturing Co., Ltd. Therefore, it's specifications are subject to change or our products in it may be discontinued without advance notice. Please check with our sales representatives or product engineers before ordering.
2.This datasheet has only typical specifications because there is no space for detailed specifications.
Therefore, please review our product specifications or consult the approval sheet for product specifications before ordering.

Note: This datasheet may be out of date.
Please download the latest datasheet of TZR1Z040A001R00 from the official website of Murata Manufacturing Co., Ltd.

http://www.murata.com/en-us/products/productdetail?partno=TZR1Z040A001R00

TZR1Z040A001R00

Product Data

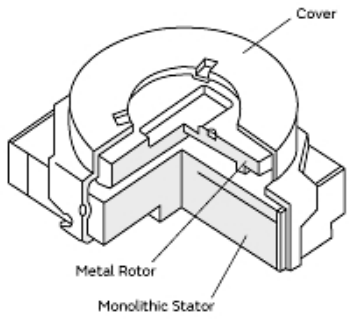

Constructions

Please use the following recommended screwdriver.
You can order this driver with part number below.
Though you can also adjust the capacitance value by commercial products, please use one which has the same head size as the driver below.

Screwdriver for Manual Adjustment
Murata Part No.: **KMDR160**

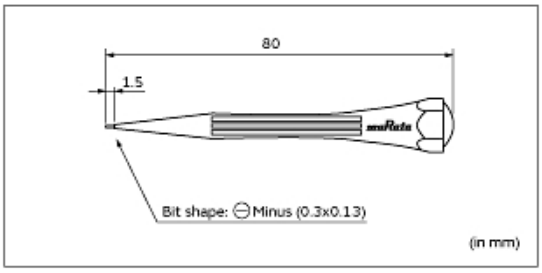

Recommended Screwdriver

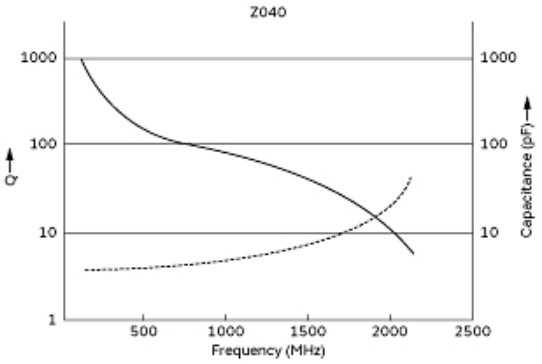

Frequency Characteristics

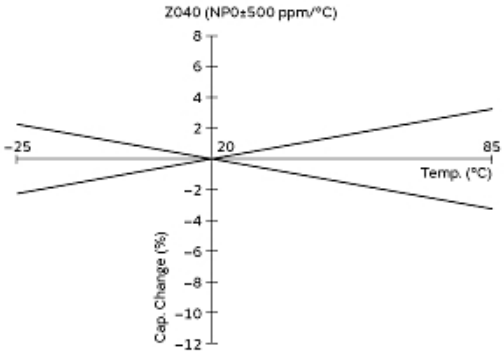

Temp. Coeff. Characteristics

Attention
1.This datasheet is downloaded from the website of Murata Manufacturing Co., Ltd. Therefore, it's specifications are subject to change or our products in it may be discontinued without advance notice. Please check with our sales representatives or product engineers before ordering.
2.This datasheet has only typical specifications because there is no space for detailed specifications.
Therefore, please review our product specifications or consult the approval sheet for product specifications before ordering.