Note: This datasheet may be out of date.
Please download the latest datasheet of PVZ2R105C04B00 from the official website of Murata Manufacturing Co., Ltd.

http://www.murata.com/en-us/products/productdetail?partno=PVZ2R105C04B00

PVZ2R105C04B00

Discontinued RoHS REACH

Appearance & Shape

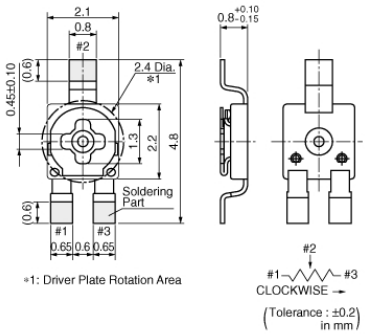

Features

1. Ultra-small and thin external dimensions of 2.1(W)x4.8(L)x0.9 max. (T)mm.
   (Rear adjustment type: PVZ2R_C04 Series)
2. Au plated termination achieves a high-density PCB mounting.
3. Cross-shaped driver slot allows for in-process automatic adjustment and it provides superior adjustability.
4. Two-piece parts construction achieves low cost and excellent quality.

Packaging Information

Packaging	Specifications	Standard Packing Quantity
B00	Bulk(Bag)	1000

Attention
1.This datasheet is downloaded from the website of Murata Manufacturing Co., Ltd. Therefore, it's specifications are subject to change or our products in it may be discontinued without advance notice. Please check with our sales representatives or product engineers before ordering.
2.This datasheet has only typical specifications because there is no space for detailed specifications.
Therefore, please review our product specifications or consult the approval sheet for product specifications before ordering.

Note: This datasheet may be out of date.
Please download the latest datasheet of PVZ2R105C04B00 from the official website of Murata Manufacturing Co., Ltd.

http://www.murata.com/en-us/products/productdetail?partno=PVZ2R105C04B00

PVZ2R105C04B00

Specifications

Power Rating	0.05W
Shape	SMD
Maximum Working Voltage	50Vdc
Adjustment Direction	Rear
Size	2mm
Auto Adjustment	Yes
Number of Turns (Effective Rotation Angle)	1(240°±10°)
Mechanical Rotation Angle	Endless
Total Resistance Value	1MΩ
Total Resistance Value Tolerance	±30%
Temperature Coefficient of Resistance	±500ppm/℃
Resistance Taper	B (Linear)
Contact Resistance Variation	5% max. of nominal total resistance value
Residual Resistance	2% max. of nominal total resistance value
Soldering Method	Soldering Iron,Reflow
Torque	1.0 to 9.8mN・m
Measure Condition of RatedPower	50℃
Operating Temperature Range	-25℃ to 85℃
Mass	0.013g

Attention
1.This datasheet is downloaded from the website of Murata Manufacturing Co., Ltd. Therefore, it's specifications are subject to change or our products in it may be discontinued without advance notice. Please check with our sales representatives or product engineers before ordering.
2.This datasheet has only typical specifications because there is no space for detailed specifications.
Therefore, please review our product specifications or consult the approval sheet for product specifications before ordering.

Note: This datasheet may be out of date.
Please download the latest datasheet of PVZ2R105C04B00 from the official website of Murata Manufacturing Co., Ltd.

http://www.murata.com/en-us/products/productdetail?partno=PVZ2R105C04B00

PVZ2R105C04B00

Product Data

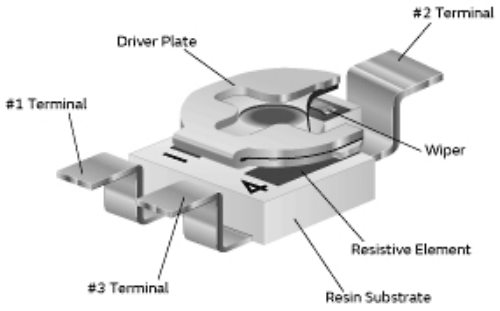

Constructions

Attention
1.This datasheet is downloaded from the website of Murata Manufacturing Co., Ltd. Therefore, it's specifications are subject to change or our products in it may be discontinued without advance notice. Please check with our sales representatives or product engineers before ordering.
2.This datasheet has only typical specifications because there is no space for detailed specifications.
Therefore, please review our product specifications or consult the approval sheet for product specifications before ordering.