Note: This datasheet may be out of date.
Please download the latest datasheet of SFULA455KU2A-B0 from the official website of Murata Manufacturing Co., Ltd.

http://www.murata.com/en-us/products/productdetail?partno=SFULA455KU2A-B0

SFULA455KU2A-B0

Discontinued RoHS REACH

Applications

Unsuitable Applications	Please be sure to read and comply with these "Precautions for use."
Specific Applications	Consumer equipment Please refer to Our Website and specifications, etc. for information about the performance, functions, quality, management, and safety required for the above applications, and use Products after confirming the performance and reliability of the actual Product.

Appearance & Shape

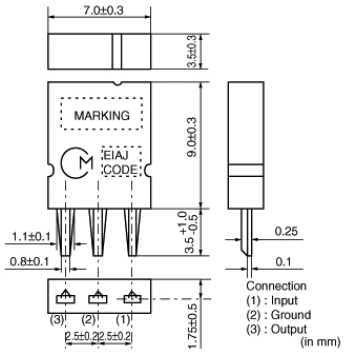

Packaging Information

Packaging	Specifications	Standard Packing Quantity
B0	Bulk	500

Features

SFULA series for AM use is one of the most recommendable intermediate filters, having such distinctive features as high selectivity, high stability, and adjustment-free operation. Additionally its easy matching with IC helps create an easy circuit design.

Features
1. Center frequency range between 450 to 470kHz are available standard tolerance of +/-2kHz.
2. For frequency synthesizers, center frequencies of 450, 459 and 468kHz are available standard tolerance of +/-1kHz.

Attention
1.This datasheet is downloaded from the website of Murata Manufacturing Co., Ltd. Therefore, it's specifications are subject to change or our products in it may be discontinued without advance notice. Please check with our sales representatives or product engineers before ordering.
2.This datasheet has only typical specifications because there is no space for detailed specifications.
Therefore, please review our product specifications or consult the approval sheet for product specifications before ordering.

Note: This datasheet may be out of date.
Please download the latest datasheet of SFULA455KU2A-B0 from the official website of Murata Manufacturing Co., Ltd.

http://www.murata.com/en-us/products/productdetail?partno=SFULA455KU2A-B0

SFULA455KU2A-B0

Specifications

Operating Temperature Range	-20℃ to 80℃
Shape	Lead
Elements	1
Center Frequency	455.0kHz
Center Frequency Tolerance	±2kHz
Nominal Center Value	No
3dB Bandwidth	10.0kHz±3.0kHz
Selectivity(+)	4dB[fo+10kHz]
Selectivity(-)	6dB[fo-10kHz]
Spurious Attenuation	10dBmin.[within 0.1 to 3MHz]
Insertion Loss	5.0dBmax.(at minimum loss point)
Ripple	0.0dB[within 3dBB.W.]
GDT Deviation	20μsec.
Input/Output Impedance	3000Ω
Mass	347.98mg

Attention
1.This datasheet is downloaded from the website of Murata Manufacturing Co., Ltd. Therefore, it's specifications are subject to change or our products in it may be discontinued without advance notice. Please check with our sales representatives or product engineers before ordering.
2.This datasheet has only typical specifications because there is no space for detailed specifications.
Therefore, please review our product specifications or consult the approval sheet for product specifications before ordering.

Note: This datasheet may be out of date.
Please download the latest datasheet of SFULA455KU2A-B0 from the official website of Murata Manufacturing Co., Ltd.

http://www.murata.com/en-us/products/productdetail?partno=SFULA455KU2A-B0

SFULA455KU2A-B0

Product Data

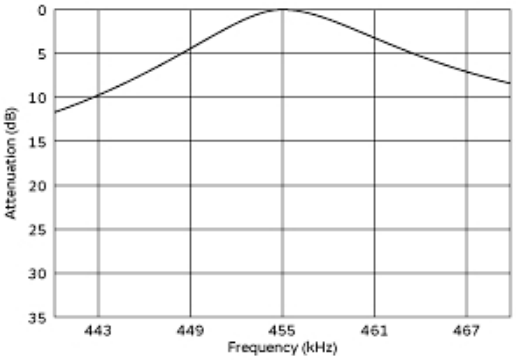

Frequency Characteristics (filter Only)

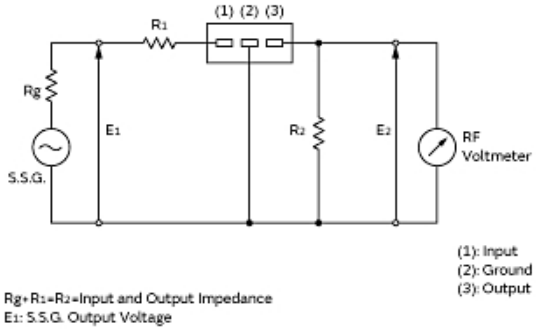

Measurement Circuit

Item \ Type	SFULA□B			SFZLA□A		
	7x7mm IFT					
Winding Specification	(1)—(2)	(2)—(3)	(4)—(6)	(1)—(2)	(2)—(3)	(4)—(6)
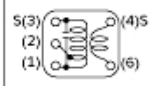 (Bottom view)	70T	115T	7T	68T	84T	14T
No load Qu	105			90		
Tuning Capacitance	180pF			180pF		

• Matching of CERAFIL® SFULA/SFZLA series with IFT is decided by the IFT secondary side impedance, |Z2|. The design target values of |Z2| are:
For SFULA□B : 300Ω
For SFZLA□A : 1kΩ

Recommended Ift

Attention
1.This datasheet is downloaded from the website of Murata Manufacturing Co., Ltd. Therefore, it's specifications are subject to change or our products in it may be discontinued without advance notice. Please check with our sales representatives or product engineers before ordering.
2.This datasheet has only typical specifications because there is no space for detailed specifications.
Therefore, please review our product specifications or consult the approval sheet for product specifications before ordering.